Rugby PLUS

This projection screen model has been conceived for residential installations, where design features and attention to details are needed.

In its tensioned version (Tensio Classic), the Rugby PLUS screens are the perfect solution to combine aesthetics, functionality and technical performance.

The Tensio Classic system uses elastic tensioning cables threaded through eyelets, creating a curvature of the projection surface that prevents the formation of folds and puckering and ensures crease-free edges. The black (standard) or white (optional on request) side edges are available in 50 or 70 mm.

See page for Technical data 59

Lowbar design detail

Rugby PLUS Tensio Classic

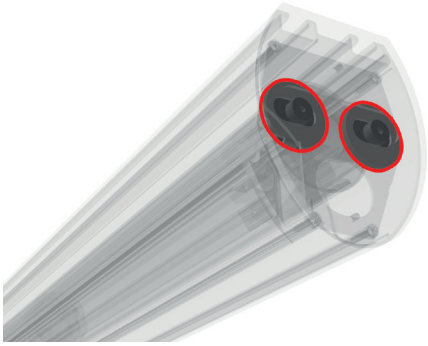

Quiet Rolling System
Using a double head enables the insertion of rubber bushings to absorb vibrations between the case and the roller. This system reduces the noise of the screen, which will be highly appreciated in residential environments.

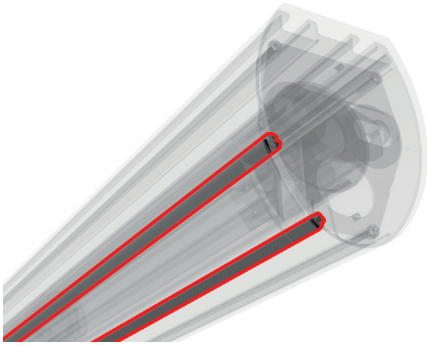

Softend Lowbar System
Designed using soft gaskets that dampen noise and absorb contacts when closing the lower bar.

SuperQuick Bracket Attachment System
The screen is supplied with an improved rapid and user-friendly fixing system for both wall and ceiling mounting. The clamping has been designed adopting symmetrical logics to enable both front and back mounting. The bracket kit consists of a single fixing unit (extruded aluminium bracket) and a single clamping unit (PVC moulded block), significantly reducing the number of parts.

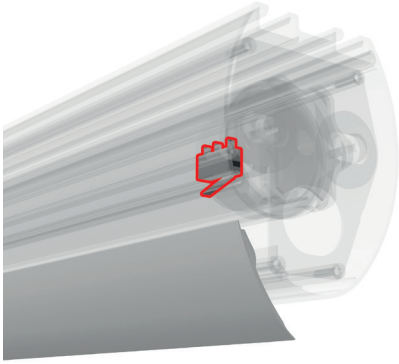

Auto Adjustment System
Another feature of the Rugby PLUS model is the use of a micro switch that ensures that the lower bar is always locked in the same position when closed. This auto-adjustment system means that there is no need for the customer to correct any stretching of the screen over time.

Create your own screen with the PSS

- **Personalized dimensions:** width and height
- **Motor type:** standard motor or radio integrated motor (optional)
- **Case:** with quick-installation system
- **Case color:** standard in White Matte. Optional in Black Matte. Custom color for an extra cost
- **Standard Drop:** from 5 to 45 cm
- **Projection surface fall:** back (standard), front or reverse-roll (optional)
- **Side of command/motor:** right (standard) or left (optional)

Projection Surfaces (see page 6)

- Reference White 2 / Reference Grey 2 / Reference White 2 Acoustik / Reference Grey 2 Acoustik
- Ambient Grey 2 / Ambient Grey
- Vision White / Vision White Pro
- Vision Acoustik
- Vision Rear DB available only without black borders

Standard Accessories

- SuperQuick Bracket Attachment System, quick installation wall or ceiling brackets
- Softend Lowbar System, rubber shock absorbers between the lower bar and case
- Quiet Rolling System, rubber shock absorbers between the roller and case
- Auto Adjustment System, limit switch automatic adjustment
- Unipolar switch
- Remote control (only for radio integrated version)

Optional Accessories

- Interface to drive the screen in radio frequency with remote control (not included), 12V trigger, unipolar switch, dry contact or RS232
- SRI motor option RF radio integrated standard receiver and transmitter
- SIO IO-homecontrol® motor option RF radio integrated and remote control
- Receiver and infrared remote control
- Extension brackets for screens up to 60 cm
- Screen lift

PSS Formats

1:1	1.33:1	1.60:1	1.78:1	2.35:1	2.37:1	2.39:1	2.40:1
	4:3	16:10	16:9	21:9			

Rugby Plus

Tensio Classic 50 mm borders / without borders

Aspect Ratio	Viewing Width	Viewing Height	Diagonal Inches	Overall Width	Overall Height	Surface Width	Surface Height	Standard Drop	Total Maximum Drop	Packaging Dimensions	Net Weight	Gross Weight
	C	D	N	A	B	F	G	P	mm	mm	kg	kg
1,00 (1:1)	1620	1620	**90**	2080	1884	1720	1720	50	50	2260X150X180	15	17
	2120	2120	**118**	2580	2464	2220	2270	100	100	2760X210X200	20	22
	2620	2620	**146**	3080	2964	2720	2770	100	100	3260X210X200	26	28
1,33 (4:3)	1620	1218	**80**	2080	1482	1720	1318	50	450	2260X150X180	15	17
	2120	1594	**104**	2580	1858	2220	1694	50	450	2760X150X180	20	22
	2620	1970	**129**	3080	2314	2720	2120	100	450	3260X210X200	26	28
	3120	2346	**154**	3580	2690	3220	2496	100	450	3760X210X200	32	34
	3620	2722	**178**	4080	3066	3720	2872	100	450	4260X210X200	38	40
	4120	3098	**203**	4580	3442	4220	3248	100	350	4760X210X200	44	46
1,78 (16:9)	1620	910	**73**	2080	1174	1720	1010	50	450	2260X150X180	15	17
	2120	1191	**96**	2580	1455	2220	1291	50	450	2760X150X180	20	22
	2620	1472	**118**	3080	1816	2720	1622	100	450	3260X210X200	26	28
	3120	1753	**141**	3580	2097	3220	1903	100	450	3760X210X200	32	34
	3620	2034	**163**	4080	2378	3720	2184	100	450	4260X210X200	38	40
	4120	2315	**186**	4580	2659	4220	2465	100	450	4760X210X200	44	46
1,6 (16:10)	1620	1013	**75**	2080	1277	1720	1113	50	450	2260X150X180	15	17
	2120	1325	**98**	2580	1589	2220	1425	50	450	2760X150X180	20	22
	2620	1638	**122**	3080	1982	2720	1788	100	450	3260X210X200	26	28
	3120	1950	**145**	3580	2294	3220	2100	100	450	3760X210X200	32	34
	3620	2263	**168**	4080	2607	3720	2413	100	450	4260X210X200	38	40
	4120	2575	**191**	4580	2919	4220	2725	100	450	4760X210X200	44	46
2,35 (21:9)	1620	689	**69**	2080	953	1720	789	50	450	2260X150X180	15	17
	2120	902	**91**	2580	1166	2220	1002	50	450	2760X150X180	20	22
	2620	1115	**112**	3080	1459	2720	1265	100	450	3260X210X200	26	28
	3120	1328	**133**	3580	1672	3220	1478	100	450	3760X210X200	32	34
	3620	1540	**155**	4080	1884	3720	1690	100	450	4260X210X200	38	40
	4120	1753	**176**	4580	2097	4220	1903	100	450	4760X210X200	44	46
2,37	1620	684	**69**	2080	948	1720	784	50	450	2260X150X180	15	17
	2120	895	**91**	2580	1159	2220	995	50	450	2760X150X180	20	22
	2620	1105	**112**	3080	1449	2720	1255	100	450	3260X210X200	26	28
	3120	1316	**133**	3580	1660	3220	1466	100	450	3760X210X200	32	34
	3620	1527	**155**	4080	1871	3720	1677	100	450	4260X210X200	38	40
	4120	1738	**176**	4580	2082	4220	1888	100	450	4760X210X200	44	46
2,40	1620	675	**69**	2080	939	1720	775	50	450	2260X150X180	15	17
	2120	883	**90**	2580	1147	2220	983	50	450	2760X150X180	20	22
	2620	1092	**112**	3080	1436	2720	1242	100	450	3260X210X200	26	28
	3120	1300	**133**	3580	1644	3220	1450	100	450	3760X210X200	32	34
	3620	1508	**154**	4080	1852	3720	1658	100	450	4260X210X200	38	40
	4120	1717	**176**	4580	2061	4220	1867	100	450	4760X210X200	44	46

Custom sizes are available upon request

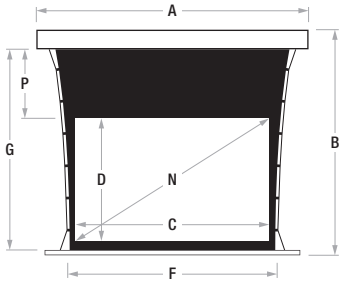

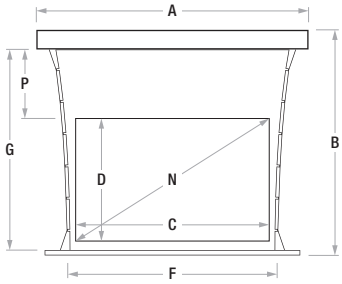

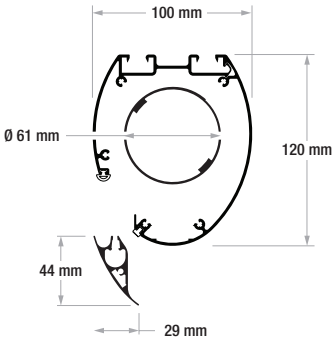

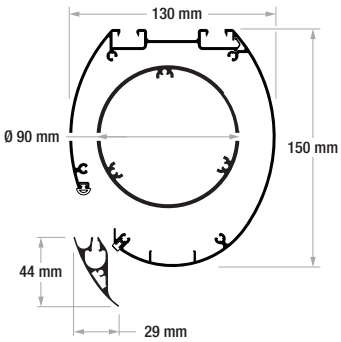

In certain circumstances, due to the surface's height, it is necessary to use a case with the rolling tube of 90 mm.

REACH COMPLIANCE · CE · RoHS COMPLIANT · M1 M2 Surface Fireproof Certifications

Rugby Plus

Tensio Classic 70 mm borders

Aspect Ratio	Viewing Width	Viewing Height	Diagonal Inches	Overall Width	Overall Height	Surface Width	Surface Height	Standard Drop	Total Maximum Drop	Packaging Dimensions	Net Weight	Gross Weight
	C	D	N	A	B	F	G	P	mm	mm	kg	kg
1,00 (1:1)	1580	1580	**88**	2080	1884	1680	1720	70	70	2260X150X180	15	17
	2080	2080	**116**	2580	2444	2180	2250	100	100	2760X210X200	20	22
	2580	2580	**144**	3080	2944	2680	2750	100	100	3260X210X200	26	28
1,33 (4:3)	1580	1188	**78**	2080	1492	1680	1328	70	450	2260X150X180	15	17
	2080	1564	**102**	2580	1868	2180	1704	70	450	2760X150X180	20	22
	2580	1940	**127**	3080	2304	2680	2110	100	450	3260X210X200	26	28
	3080	2316	**152**	3580	2680	3180	2486	100	450	3760X210X200	32	34
	3580	2692	**176**	4080	3056	3680	2862	100	450	4260X210X200	38	40
	4080	3068	**201**	4580	3432	4180	3238	100	350	4760X210X200	44	46
1,78 (16:9)	1580	888	**71**	2080	1192	1680	1028	70	450	2260X150X180	15	17
	2080	1169	**94**	2580	1473	2180	1309	70	450	2760X150X180	20	22
	2580	1449	**117**	3080	1813	2680	1619	100	450	3260X210X200	26	28
	3080	1730	**139**	3580	2094	3180	1900	100	450	3760X210X200	32	34
	3580	2011	**162**	4080	2375	3680	2181	100	450	4260X210X200	38	40
	4080	2292	**184**	4580	2656	4180	2462	100	450	4760X210X200	44	46
1,6 (16:10)	1580	988	**73**	2080	1292	1680	1128	70	450	2260X150X180	15	17
	2080	1300	**97**	2580	1604	2180	1440	70	450	2760X150X180	20	22
	2580	1613	**120**	3080	1977	2680	1783	100	450	3260X210X200	26	28
	3080	1925	**143**	3580	2289	3180	2095	100	450	3760X210X200	32	34
	3580	2238	**166**	4080	2602	3680	2408	100	450	4260X210X200	38	40
	4080	2550	**189**	4580	2914	4180	2720	100	450	4760X210X200	44	46
2,35 (21:9)	1580	672	**68**	2080	976	1680	812	70	450	2260X150X180	15	17
	2080	885	**89**	2580	1189	2180	1025	70	450	2760X150X180	20	22
	2580	1098	**110**	3080	1462	2680	1268	100	450	3260X210X200	26	28
	3080	1311	**132**	3580	1675	3180	1481	100	450	3760X210X200	32	34
	3580	1523	**153**	4080	1887	3680	1693	100	450	4260X210X200	38	40
	4080	1736	**175**	4580	2100	4180	1906	100	450	4760X210X200	44	46
2,37	1580	667	**68**	2080	971	1680	807	70	450	2260X150X180	15	17
	2080	878	**89**	2580	1182	2180	1018	70	450	2760X150X180	20	22
	2580	1089	**110**	3080	1453	2680	1259	100	450	3260X210X200	26	28
	3080	1300	**132**	3580	1664	3180	1470	100	450	3760X210X200	32	34
	3580	1511	**153**	4080	1875	3680	1681	100	450	4260X210X200	38	40
	4080	1722	**174**	4580	2086	4180	1892	100	450	4760X210X200	44	46
2,40	1580	658	**67**	2080	962	1680	798	70	450	2260X150X180	15	17
	2080	867	**89**	2580	1171	2180	1007	70	450	2760X150X180	20	22
	2580	1075	**110**	3080	1439	2680	1245	100	450	3260X210X200	26	28
	3080	1283	**131**	3580	1647	3180	1453	100	450	3760X210X200	32	34
	3580	1492	**153**	4080	1856	3680	1662	100	450	4260X210X200	38	40
	4080	1700	**174**	4580	2064	4180	1870	100	450	4760X210X200	44	46

Custom sizes are available upon request

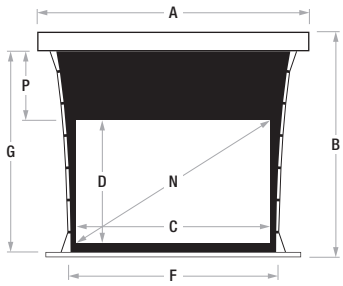

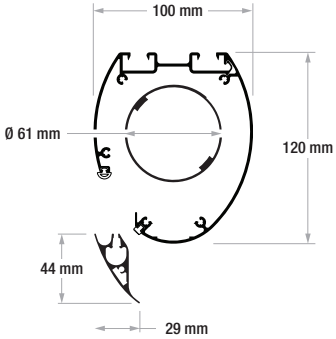

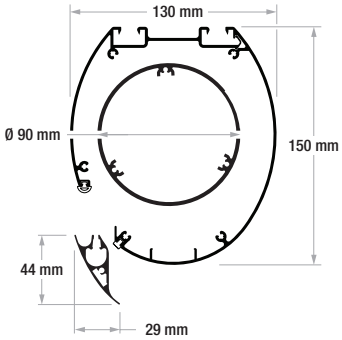

In certain circumstances, due to the surface's height, it is necessary to use a case with the rolling tube of 90 mm.

Surface Fireproof Certifications