àdeo®
Screen

PROJECTION SCREENS
CATALOGUE

Adeo Screen: at the forefront in the projection screen sector for over 2 decades now.
Present on the international market since 2007, Adeo Screen saw its business increase considerably after investing in production facilities in Zlotoryja (Poland), with 3500 sqm between factory and warehouses and 1000 sqm of offices and showroom.
The Company soon established itself on the European market as a leading manufacturer of high-quality projection screens, founding its activity on few solid principles - research and design first and foremost -, to offer cutting-edge technology, always.
All our production processes are followed with the greatest care and attention. Our products are tailored to meet the actual needs of our customers, who can also rely on efficient pre- and post-sales support.
Adeo Screen is also attentive to product safety: each screen is accompanied by CE certification and by fireproof canvas classifications.
Our wide range of products, from motorized to fixed screens in various configurations, to projection surface solutions for rental and service applications, constitutes an offer of proven quality with constantly updated technological features.
With its comprehensive range of professional applications and of home-theatre solutions for private use, Adeo Screen sets itself as one of the leading brands of projection screens on the international market.

Index

Quality System 3

PSS Personal Screen System 4

Projection Surfaces 6

Special Features 8

Motorized Tensioned Screens

Rugby PLUS Tensio Classic 13
Rugby PRO Tensio Classic 15
Inceel Tensio Classic 17
Max Inceel MFTS Max Floating Tensio 18
InSuperior FTS Floating Tensio 19
OnSuperior FTS Floating Tensio 20
Multiformat Tensio Classic 21
Biformat Tensio Classic 22
Alumid Tensio CTS 23
Max One MFTS Max Floating Tensio 24
Basic Tensio CTS 25

Motorized Non-Tensioned Screens

Rugby PLUS 27
Rugby PRO 29
Inceel 31
Max Inceel 32
Multiformat 33
Biformat 34
Alumid 35
Max One 36
Big One 37
Linear SE 38
Basic 39

Fixed Screens

Plano / Plano Velvet 41
Plano Curved 42
FrameLess 43
FrameLess Curved 44
Prestige 45
FramePro 46
Cinema 51
Cinema Curved 52

Special Solutions

Lift Screen 54
Easy Surface 55
Eyelet Surface 56
Round 57

Technical Data 59

Installation System 106

Accessories 108

Quality System

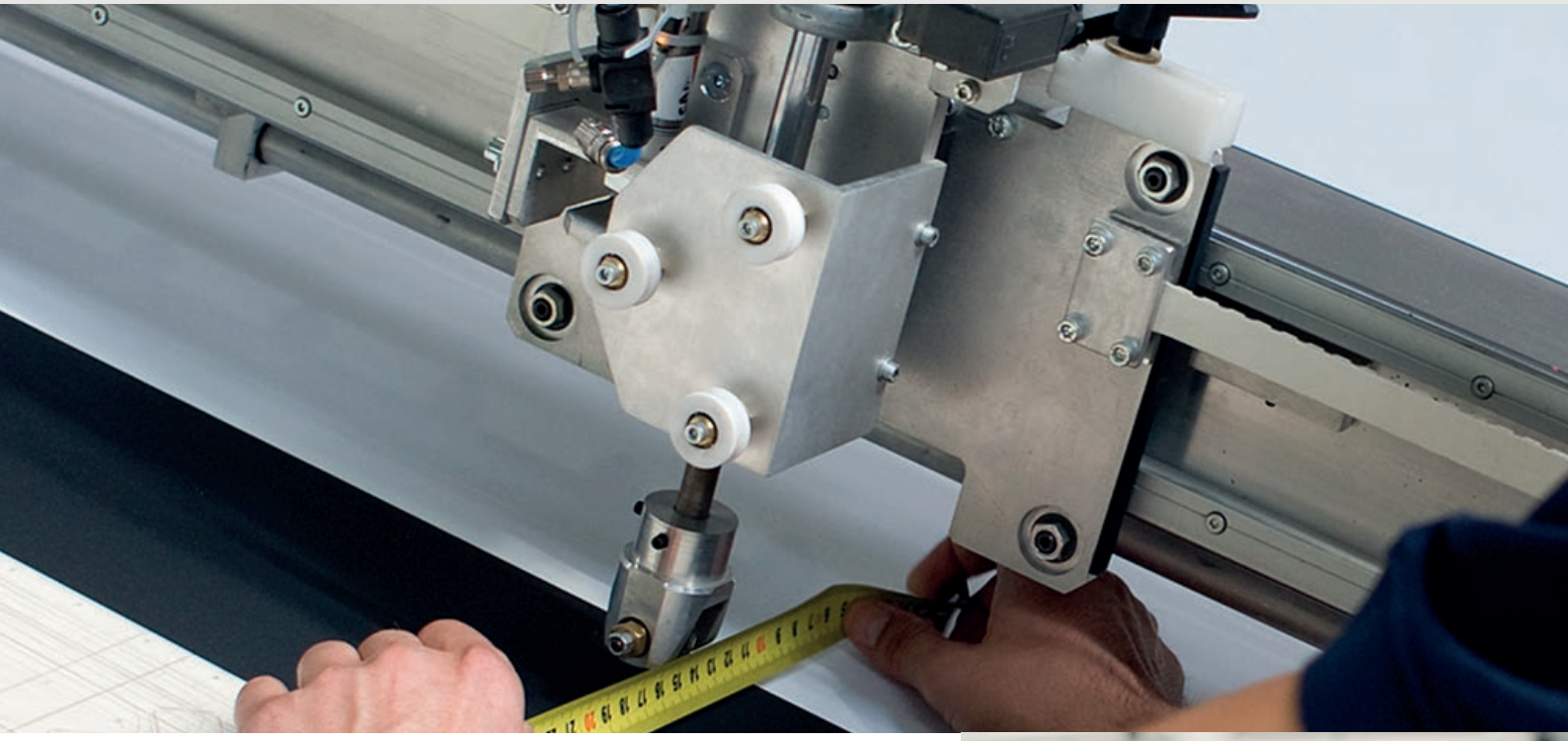

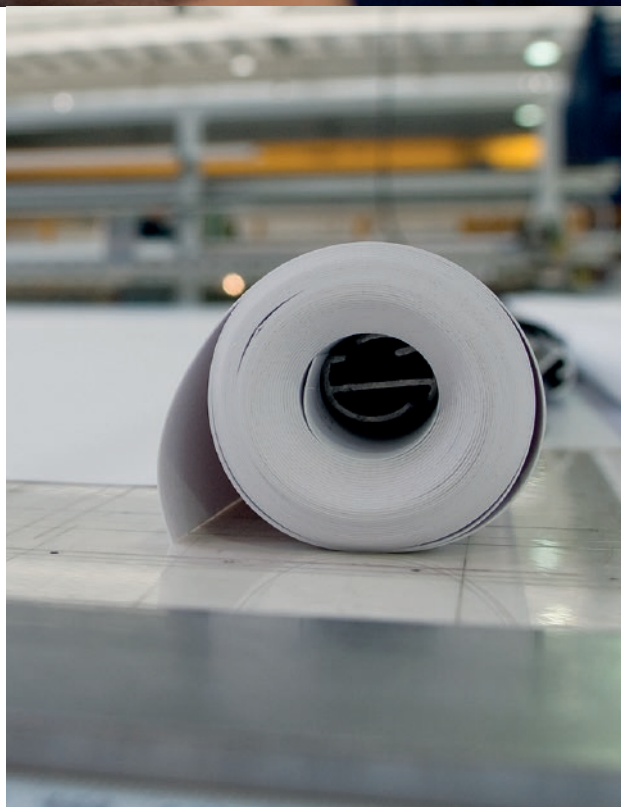

Adeo Screen adopts a quality management system based on an exclusive program, designed to comprehensively monitor every stage of the production process.

Careful selection of raw materials marks the first step in a production path that follows each screen—standard or custom—through all processing phases. The internal organization, characterized by continuous monitoring of every operational area, enables prompt and effective intervention whenever necessary.

High levels of automation, supported by state-of-the-art CAD/CAM systems and advanced cutting technologies, ensure maximum execution precision. At the same time, human supervision remains essential: highly specialized technicians oversee each stage to ensure full compliance with the highest quality standards.

Before reaching the market, every screen undergoes rigorous inspections: each unit is individually tested on dedicated test structures for final adjustments and quality checks. Only products that successfully pass these tests are awarded the Adeo Screen mark.

Packaging is also carefully studied and tailored to each model, ensuring product protection during handling and preserving its integrity.

The entire production process is further enhanced by ISO 14001 certification for environmental management, which reflects Adeo Screen's commitment to reducing environmental impact by integrating sustainable practices into every phase of production.

Adeo Screen: a path of quality and innovation, certified and internationally recognized.

adeo RoHS compliant

International Organization for Standardization ISO 14001:2015

DESIGNED IN ITALY MADE IN EU

PSS Personal Screen System

Personal Screen System is one of the distinctive features offered by Adeo Screen. The system proposes screens which can be constructed to suit the customer's specific requirements, allowing the greatest possible personalization of the product. Each of the various models of the range presents a basic profile: through the PSS the characteristics of the models can be modified and customized, since each of them is available in several variants: from the base model it is therefore possible to obtain more than 50 million combinations.

Case

The case is the structure that protects the surface from gathering dust once is has been rolled up. Screens can be produced with or without a case. The former can be installed with the standard procedure (which favours the aesthetic aspect and a harmonious visual impact by significantly reducing the visibility of the wall-mount bracket), or with a time-saving procedure (this consists of quick and easy operations, and is ideal for professional applications). The range of models without a case (Basic) responds to special installation requirements (such as the presence of recesses, beams or space limitations).

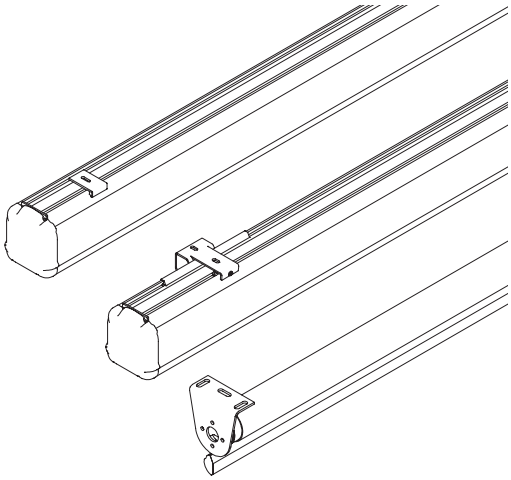

Color of the case

Standard is always white, optional in black or custom color. The varnishes used are free of toxic substances, in compliance with the latest applicable norms on environmental protection.

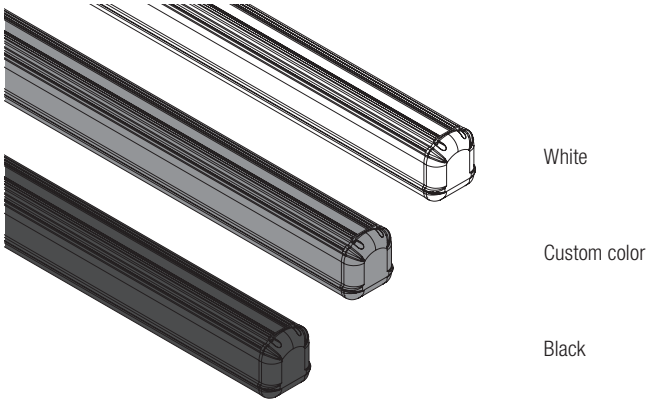

Height of the drop

Adeo has foreseen the possibility of providing projection surfaces with dark edges and tensioned screens with an optional top, which can be standard (for the sizes and options available for each format see the model's reference table) or personalized. In the personalized version, height can vary from 5 to 140 cm (in multiples of 5 cm), based on type of screen, clear opening ratio and the size limits of each model. The top is applied in ceiling-mount installations in order to place the clear opening height in the desired point, positioning the surface in an optimal manner with respect to the projector.

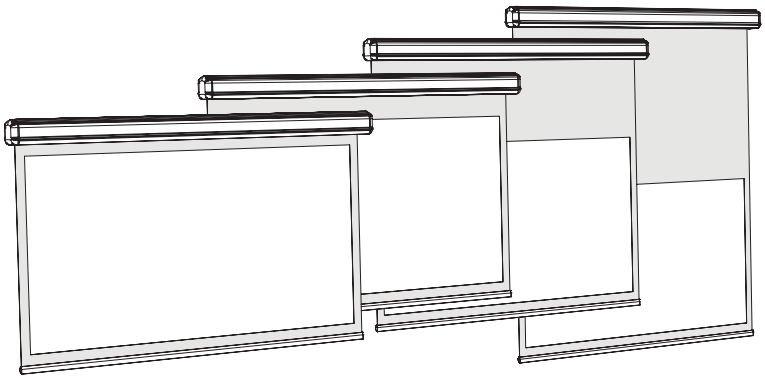

Surface fall

The projection surface can be unrolled from the front (in particular in the presence of obstacles on the wall) or from the back. The choice of either option will result respectively in a greater or smaller distance between the surface and the wall.
It's also available the Reverse-roll option.

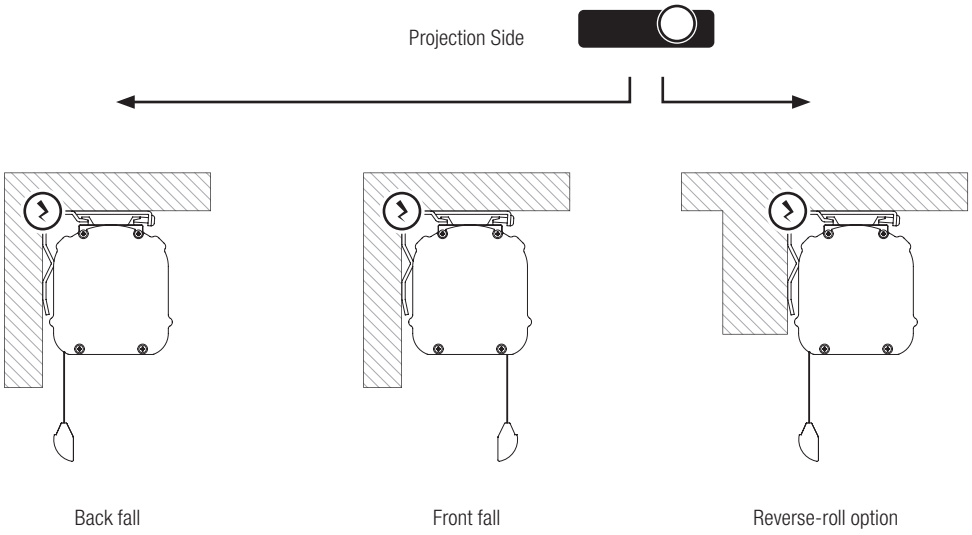

Type of roller

There are two types of screen roller mechanisms: motorized and motorized with radio integrated receiver.
The first type is based on a tubular motor activated by a standard wall-mounted up/down dead man selector switch.
The second is characterized by a motor with integrated receiver unit and remote control.

Motor/command side

The motor/command can be positioned on the right- or left-hand side of the case. In motorized screens this option is useful for bringing the wiring closer to the existing electrical system.

Personalized dimensions

To design a video system correctly, it is necessary to identify the optimal screen size for every single application. Specific conditions of the projection environment may require the building of a model with dimensions (width and height) customized to the millimeter. With Adeo this option is possible, subject to the respect of geometrical parameters and the need to retain the quality of the final projection.
Three variables must be considered to obtain the best results: the distance between the screen and the furthest spectator (D), the type of application (presentation from PC, graphics, home theatre, etc.), and the aspect ratio. To make the size of the screen independent from the chosen aspect ratio, the screen's height (H) is considered. Unlike the screen's width (W), its height remains the same regardless of the aspect ratio chosen.
Depending on the various use contexts, the height (H) is calculated by means of the following formulas:

> Presentations from PC: H=D/6
> Graphics/tables/drawings: H=D/4
> Home Theatre with HD resolution or upconverted SD resolution: H=D/3.3
> Home Theatre with Full HD resolution: H=D/2.5

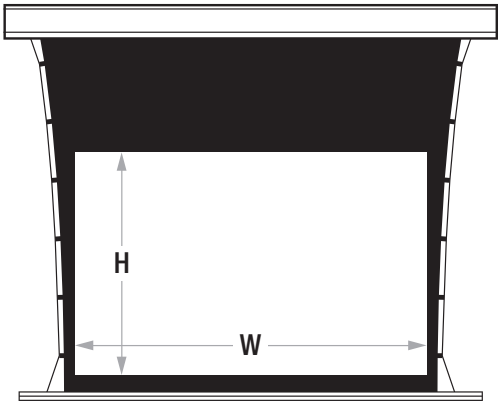

In order to obtain the respective width (W) of the screen you just multiply the resulting height (H) by the chosen aspect ratio (1.33, 1.78, 1.85, 2.35 etc.).
N.B: in Home Theatre applications, the D stands for the distance between the screen and the main spectator (sweet spot).

Projection Surfaces

Reference White 2

White surface for front projection

Reference White 2 is a new improved material designed for those applications that require exceptional color accuracy at all viewing angles. Thanks also to the absence of hot spot effect, it is perfect to be used in a home-theatre or a professional studio. Recommended for controlled light environments.

Reference White 2 Acoustik

White surface for front projection

Micro perforated version of our Reference White 2. Perfect for all applications that require exceptional color accuracy at all viewing angles. Thanks to the micro holes of 0.5 mm is the ideal choice for installations with sound sources placed behind the screen. Characterized by the absence of hot-spot effect, it is perfect for use in hometheater installations or professional studios. Recommended for controlled light environments.

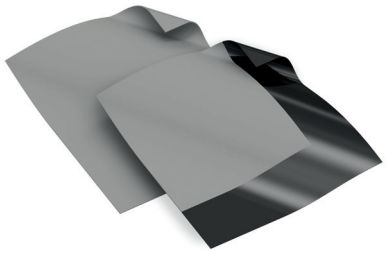

Reference Grey 2

Grey surface for front projection

Reference Grey 2 is a new improved material designed for installations in rooms with bright walls and some ambient light. It maintains it's faithful color accuracy at all viewing angles while improving the black level of fixed-matrix video projectors. All these characteristics makes it also compatible with Ultra-Short Throw (UST) and Short Throw (ST) installations.

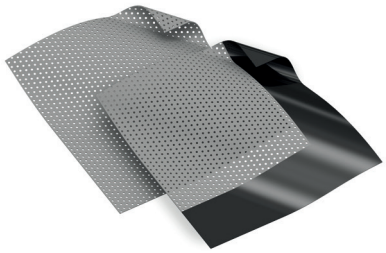

Reference Grey 2 Acoustik

Grey surface for front projection

Micro perforated version of our Reference Grey 2. Thanks to the 0.5mm holes that makes it acoustically transparent, it's ideal in installations with sound sources placed behind the screen. Designed for use in environments with bright walls and some ambient light, like the non-acoustically transparent version, it maintains color accuracy at all viewing angles, improving the black level of fixed matrix projectors. All these characteristics makes it the best with Ultra-Short Throw (UST) installations.

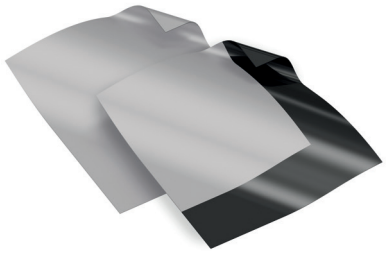

Ambient Grey 2

Grey surface for front projection

New ambient light rejecting (ARL) surface that has been refined to improve the color uniformity and the depth of the projected image. It is our best surface for applications with presence of ambient light. This fabric can also be used with Short Throw (ST) projectors.

Projection Surfaces

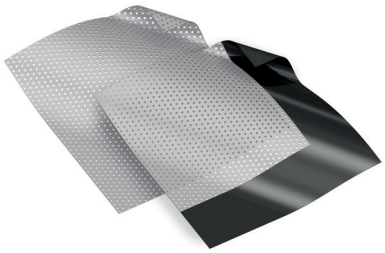

Ambient Grey 2 Acoustik

Grey surface for front projection

Acoustically transparent version of our best ambient light rejecting (ALR) surface, with great color uniformity and depth of the projected image. This fabric can be used as well in combination with a Short Throw (ST) projector, but not with an Ultra-Short Throw (UST) one.

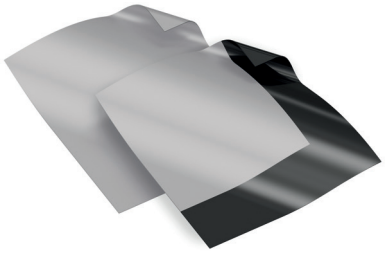

Ambient Grey

Grey surface for front projection

Ambient Grey surface is designed to be used in applications with the presence of ambient light or in rooms with bright colored walls. This screen material achieves the best video performance with high brightness Home Theater projectors, and is also suitable to be used in Ultra-Short Throw (UST) and Short Throw (ST) applications, maintaining excellent black levels and perfect color uniformity.

Vision White

White surface for front projection

Vision White represents the top in terms of projection surface quality, guaranteeing perfect planarity, for optimal image reproduction even on very large screens, and excellent light diffusion, by effect of the special embossing of the projection surface. The wide viewing angle, high luminosity, absence of hot-spot effects and exceptional uniformity of colour have made it the benchmark surface of the Adeo range. Owing to its versatility it can be used in different contexts, from professional applications (also in the presence of ambient light) to high definition home theatre systems (recommended for environments with dimmed light).

Vision White Pro

White surface with black back for front projection

The Adeo range also includes a laminated surface, especially designed for critical situations where the screen is positioned in front of a source of light.

By blocking out the light, the black back guarantees unimpaired projection. This projection material is particularly suitable for small and medium-sized screens. Note that in any case the surface should not be used to shield the sunlight. This would result in a damage and a consequent loss of planarity.

Video projection screens are not designed to be installed in front of windows, near strong sources of light, or at direct sunlight, near heat sources as heating stoves, fireplaces, flues or air conditioning systems for both warm and cold air.

Vision Acoustik

White surface for front projection

The diam. 0.5 mm micro-holes punched all over the surface render this projection material "acoustically transparent", so that the sound source can be positioned behind the screen without compromising the audio standard. Devised especially for high definition home theatre applications, Vision Acoustik reduces the loss of luminosity typical of traditional perforated surfaces owing to the use of micro-holes, whose significantly smaller diameter guarantees the absence of hot-spot effects at the centre of the screen.

Vision Macro Acoustik

White surface for front projection

Like Vision Acoustik, this surface is also perforated with micro-holes (diam. 1.3 mm) which render it "acoustically transparent", so that the sound source can be positioned behind the screen: a perfect localisation of the projected image and of the sound source is thus obtained. Its application, however, is different: MacroAcoustik has been devised especially for large-size screens, and again for avoiding the hot-spot effect.

Vision Rear DB

Surface for front and rear projection

This innovative screen material is designed to be used in both front and rear projection application. It can be used also in applications that requires to continuously switch between front and rear projection by electronically inverting image on vertical axis. It offers extremely wide viewing angle with flat spectral response and no colour shift throughout the whole recommended viewing angle. Designed for 4K Ultra HD applications, it is perfectly suited for use with todays high-brightness high-performance video projectors.

Vision Fold 2

White scratch-resistant surface for front projection

In service and rental contexts, screens are subjected to frequent assembling and dismantling operations, and the surface often remains folded for long periods and in all sorts of climate conditions. These circumstances can damage normal projection materials, impressing marks in the place of the folds. To avoid the "impression effect" Adeo offers Vision Fold 2 , the projection material characterised by greater elasticity.

Vision Fold Rear 2

Grey surface for rear projection

A proposal for the service and rental channel, specific for rear projection. Owing to its outstanding elasticity, this surface resists wear-and-tear and weathering, and withstands the repeated assembling and dismantling operations typical of the applications it is intended for.

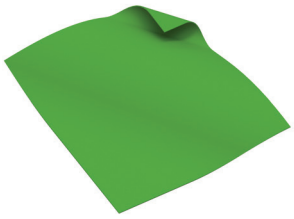

Chroma Key

Surface in green color RAL 6038

Chroma key is a technique used in the TV and cinema industries to create special effects, projecting people or objects onto "virtual" backgrounds, being added separately at a later stage.

This solution allows to mix two (or more) videos, using a particular background during post-production, resulting in perfectly merged and synchronized images.

Video projection screens are not designed to be installed in front of windows, near strong sources of light, or at direct sunlight, near heat sources as heating stoves, fireplaces, flues or air conditioning systems for both warm and cold air.

Special Features

That little something extra

Adeo products distinguish themselves from all the others, owing to a series of special features adopted during the project development and realization phases.
Certain characteristics regard specific aspects of the structure or operation of the screen, such as its projection surface, tensioning, lower bar, roller and motorization; while others are associated with the production itself, such as the automated management of designs and the environmental conditions of the production facilities.
That little something extra that makes all the difference, and endows each model with unique style and superior potential.

Projection surfaces

All the screens that bear the Adeo trademark feature an embossed surface, specifically designed to improve the projection's definition. The result of an extensive research and development process, this characteristic guarantees improved performances, achieving the 4K Ultra HD definition standard.
The edges of the projection surface, where present, are applied with high frequency welding instead of varnishing. This results in greater precision and clear definition between the edge and the surface, and avoids any risk of the colour coming unstuck, being excessively glossy, and other flaws which are typical of varnishing. The welding, carried out on the four sides, is also smoothed on the rear side to prevent any risk of the surface being marked. Particularly resistant through time, the matt black colour of the edges reduces annoying reflected light.
In order to prevent the formation of bothersome folds and warping, the surface is secured to the base by means of two springs placed at its ends.

The projection surface is in fact subjected to constant, albeit imperceptible, expansion and shrinking: the springs neutralize this phenomenon by dampening these movements.
All Adeo screens are equipped with a roller with a double groove, instead of a single groove. This particular structure ensures the constant planarity of the projection surface by avoiding the risk that, in the long run, the surface should marked by annoying horizontal lines impressed by the shape of the roller. In addition, when the surface is applied to the roller, a further process is carried out to avoid any gaps.

Tensioning

Adeo roller screens can be supplied with various tensioning systems.
The classic tensioning system is based on two elastic cables which depart from the base and are threaded through eyelets placed along the sides of the screen: the lateral arches thus formed contribute to ensure a "crease-proof" rolling, despite the presence of the eyelets. For each Adeo screen a calculation is carried out based on the dimensions of the roller's diameter and on the length of the projection surface: hence, from the parametric design the correct distance of the eyelets is automatically calculated so as to ensure that the eyelets do not overlap and to guarantee a smooth, fold-free rolling.
The result is perfect planarity and a harmonious visual impact, ensured by the lateral curve of the surface and by the even spacing between the eyelets. Alternatively, Adeo has developed the exclusive CTS (Constant Tensio System): two counterweights hooked onto hinges attached to the ends of the base stretch rigid cables threaded through eyelets placed along the sides of the screen.

This results in constant self-tensioning through time and neutralizes the risk of folds forming during the screen's rolling, since in this phase the eyelets remain outside the projection surface. This system focuses on the technical aspect: the lateral tensioning produced by the counterweights is totally independent from the vertical tensioning produced by the base. The eyelets of Adeo's Tensio screens are glued to the edge, instead of welded, to avoid the welding being visible from the front.

FTS™ Floating Tensio System and
MFTS™ Max Floating Tensio System

Tensioning system consisting of a double lower bar and tensioning cables. Lower bar consist of two weights, one of which is responsible for the vertical force of the material and the other associated with the tensioning cable system is responsible for the flatness of the material horizontally.

Special Features

Tensioning of screens with rigid frames is obtained through the insertion of iron rods into the four sides of the projection surface, which are then anchored to various points of the frame by means of elastic cables.

Lower Bar

The screens of the Rugby, Elegance, Professional, Inceel, InSuperior FTS, OnSuperior FTS, Multiformat and Biformat lines are provided with a special lower bar: once the screen is rolled up the case is seamlessly closed and protects the surface from gathering dust when not in use. Not just beautiful, but very practical.

Winding system

The need to reduce the size of the components as much as possible has resulted in the development of a specific structure (for certain models only) in which a smaller-scale diameter teams up with similarly reduced deformation of the canvas and of the roller itself. Depending on the model, 60 to 150 mm diameter rollers are available, in proportion with the size of the canvas to be rolled.

Motorization

The vibrations of the motor are one of the aspects that influence the quality of the product. To avoid this problem, a sheet of rubber has been inserted between the motor and the sides of the case: this prevents the diffusion of vibrations and noise from the motor to the entire case. A “vibration-proof solution”.

For the same purpose, a study has been carried out to establish the correct flexible coefficient of the rubber of the adapters placed at the ends of the tubular motor inside the roller, so as to obtain a material which is sufficiently elastic, yet not subject to expansion which could result in sliding of the motor.

Environmental conditions of the production facilities

Production takes place in a dedicated and carefully monitored environment. Since treatment of the projection surface requires specific conditions, the ambient temperature is constantly controlled in Summer and Winter to ensure optimal results.

Automated design management

The creation of an Adeo screen involves the automated design management of each model.

The process starts from the job order and the specifications it contains: the data are then processed by CAD software and forwarded to the system’s plotter.

The machine cuts the surface based on the input received. This method is characterized by the greatest flexibility: it enables the production of any type of customized screens and is particularly effective when it comes to the tensioned models.

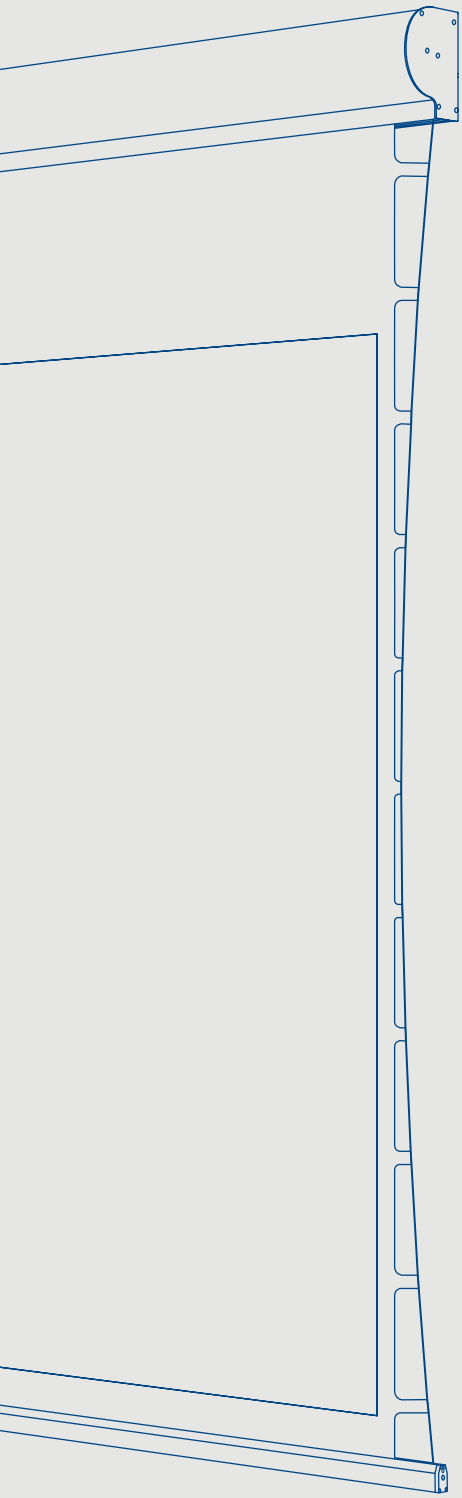

MOTORIZED TENSIONED SCREENS

Rugby PLUS

This projection screen model has been conceived for residential installations, where design features and attention to details are needed.

In its tensioned version (Tensio Classic), the Rugby PLUS screens are the perfect solution to combine aesthetics, functionality and technical performance.

The Tensio Classic system uses elastic tensioning cables threaded through eyelets, creating a curvature of the projection surface that prevents the formation of folds and puckering and ensures crease-free edges. The black (standard) or white (optional on request) side edges are available in 50 or 70 mm.

See page for Technical data 59

Lowbar design detail

Rugby PLUS Tensio Classic

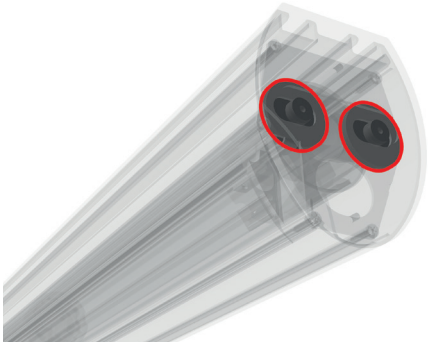

Quiet Rolling System
Using a double head enables the insertion of rubber bushings to absorb vibrations between the case and the roller. This system reduces the noise of the screen, which will be highly appreciated in residential environments.

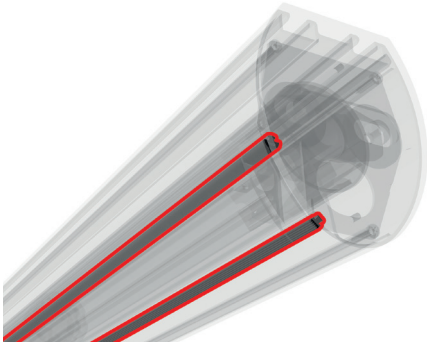

Softend Lowbar System
Designed using soft gaskets that dampen noise and absorb contacts when closing the lower bar.

SuperQuick Bracket Attachment System
The screen is supplied with an improved rapid and user-friendly fixing system for both wall and ceiling mounting. The clamping has been designed adopting symmetrical logics to enable both front and back mounting. The bracket kit consists of a single fixing unit (extruded aluminium bracket) and a single clamping unit (PVC moulded block), significantly reducing the number of parts.

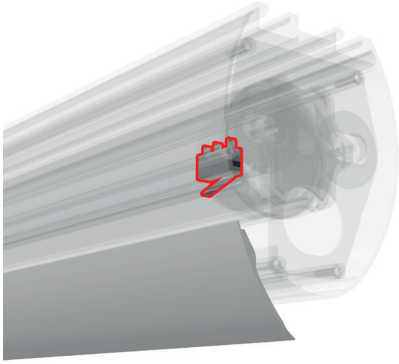

Auto Adjustment System
Another feature of the Rugby PLUS model is the use of a micro switch that ensures that the lower bar is always locked in the same position when closed. This auto-adjustment system means that there is no need for the customer to correct any stretching of the screen over time.

Create your own screen with the PSS

- **Personalized dimensions:** width and height
- **Motor type:** standard motor or radio integrated motor (optional)
- **Case:** with quick-installation system
- **Case color:** standard in White Matte. Optional in Black Matte. Custom color for an extra cost
- **Standard Drop:** from 5 to 45 cm
- **Projection surface fall:** back (standard), front or reverse-roll (optional)
- **Side of command/motor:** right (standard) or left (optional)

Projection Surfaces (see page 6)

- Reference White 2 / Reference Grey 2 / Reference White 2 Acoustik / Reference Grey 2 Acoustik
- Ambient Grey 2 / Ambient Grey
- Vision White / Vision White Pro
- Vision Acoustik
- Vision Rear DB available only without black borders

Standard Accessories

- SuperQuick Bracket Attachment System, quick installation wall or ceiling brackets
- Softend Lowbar System, rubber shock absorbers between the lower bar and case
- Quiet Rolling System, rubber shock absorbers between the roller and case
- Auto Adjustment System, limit switch automatic adjustment
- Unipolar switch
- Remote control (only for radio integrated version)

Optional Accessories

- Interface to drive the screen in radio frequency with remote control (not included), 12V trigger, unipolar switch, dry contact or RS232
- SRI motor option RF radio integrated standard receiver and transmitter
- SIO IO-homecontrol® motor option RF radio integrated and remote control
- Receiver and infrared remote control
- Extension brackets for screens up to 60 cm
- Screen lift

PSS Formats

1:1	1.33:1	1.60:1	1.78:1	2.35:1	2.37:1	2.39:1	2.40:1
	4:3	16:10	16:9	21:9			

Rugby PRO

This projection screen model has been developed for the professional channel, where ease of installation, durable materials and simplicity of use are required.

In its tensioned version (Tensio Classic), the Rugby PRO screens are the perfect solution to combine aesthetics, functionality and technical performance.

The Tensio Classic system uses elastic tensioning cables threaded through eyelets, creating a curvature of the projection surface that prevents the formation of folds and puckering and ensures crease-free edges. The black (standard) or white (optional on request) side edges are available in 50 or 70 mm.

See page for Technical data 64

Rugby PRO Tensio Classic

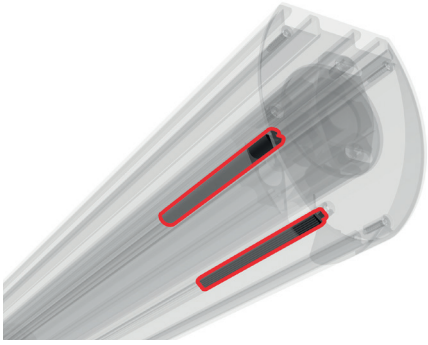

Softend Lowbar System
Designed using soft gaskets that dampen noise and absorb contacts when closing the lower bar.

SuperQuick Bracket Attachment System
The screen is supplied with an improved rapid and user-friendly fixing system for both wall and ceiling mounting. The clamping has been designed adopting symmetrical logics to enable both front and back mounting. The bracket kit consists of a single fixing unit (extruded aluminium bracket) and a single clamping unit (PVC moulded block), significantly reducing the number of parts.

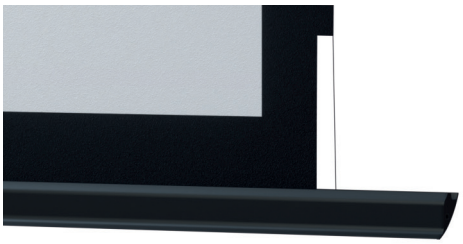

Lowbar design detail

(Optional) Screen with mechanical motor and radio receiver installed inside the casing (the receiver is not inside of the motor, like with a standard radio integrated motor).

Create your own screen with the PSS

- **Personalized dimensions:** width and height
- **Motor type:** standard motor or radio integrated motor (optional)
- **Case:** with quick-installation system
- **Case color:** standard in White Matte. Optional in Black Matte. Custom color for an extra cost
- **Standard Drop:** from 5 to 45 cm
- **Projection surface fall:** back (standard), front or reverse-roll (optional)
- **Side of command/motor:** right (standard) or left (optional)

Projection Surfaces (see page 6)

- Reference White 2 / Reference Grey 2
- Ambient Grey 2 / Ambient Grey
- Vision White / Vision White Pro
- Vision Acoustik
- Vision Rear DB available only without black borders

Standard Accessories

- SuperQuick Bracket Attachment System, quick installation wall or ceiling brackets
- Softend Lowbar System, rubber shock absorbers between the lower bar and case
- Unipolar switch
- Remote control (only for radio integrated version)

Optional Accessories

- Interface to drive the screen in radio frequency with remote control (not included), 12V trigger, unipolar switch, dry contact or RS232
- Receiver and infrared remote control
- Extension brackets for screens up to 60 cm
- Screen lift

PSS Formats

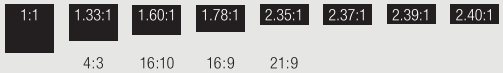

Inceel

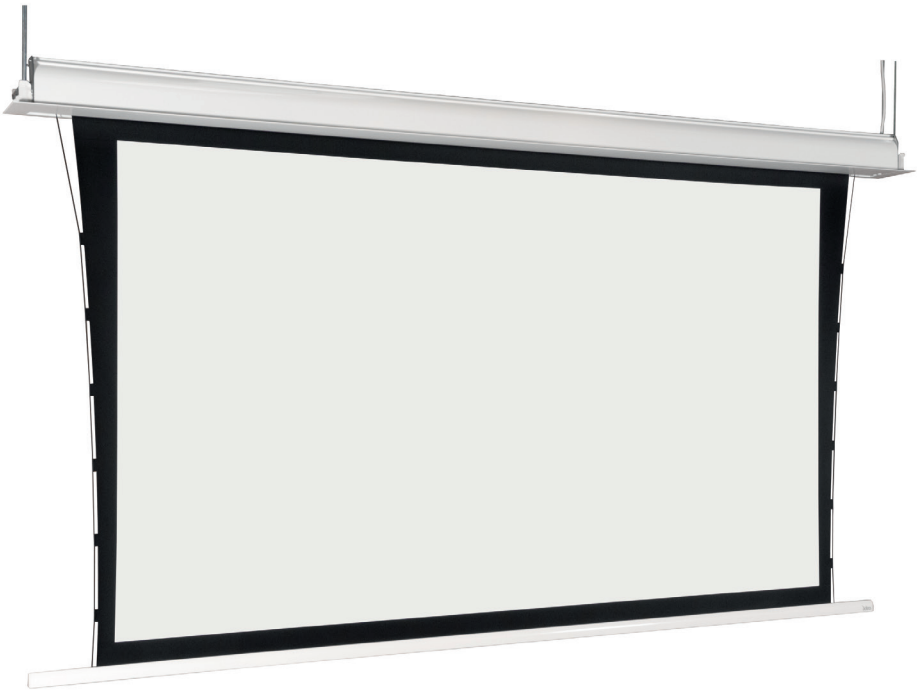

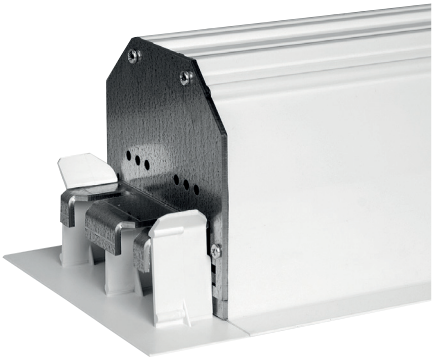

End plate detail

A screen that has been dubbed “Made for Installation” due to its innovative assembly system. In addition, this model disappears into a false ceiling by means of a retractable mechanism, and is endowed with the classic tensioning method, which ensures a perfect planarity of the surface while safeguarding a harmonious aesthetic impact. Two elastic cables depart from the ends of the base and are threaded through eyelets along the sides of the canvas, creating a lateral arch which avoids the risk of any creases forming during the rolling phase, despite the presence of the eyelets.
While maintaining the characteristic Inceel design, this solution further enhances an invaluable tool for your work and leisure time without posing any space limitations.
Available with 50 or 70 mm lateral black borders.

See page 69 for Technical data

Create your own screen with the PSS

- **Personalized dimensions:** width and height
- **Motor type:** standard motor or radio integrated motor (optional)
- **Case:** available only with case
- **Case color:** standard in White Matte. Optional in any other color for an extra cost
- **Standard Drop:** from 5 to 45 cm
- **Projection surface fall:** back (standard), front or reverse-roll (optional)
- **Side of command/motor:** right only

Projection Surfaces (see page 6)

- Reference White 2 / Reference Grey 2 / Reference White 2 Acoustik / Reference Grey 2 Acoustik
- Ambient Grey 2 / Ambient Grey
- Vision White / Vision White Pro
- Vision Acoustik
- Vision Rear DB available only without black borders

Standard Accessories

- Kit containing eight 50 cm threaded bars for installation with maximum height of 1 m
- Unipolar switch
- Remote control (only for radio integrated version)
- End plates for closing the plasterboard

Optional Accessories

- Interface to drive the screen in radio frequency with remote control (not included), 12V trigger, unipolar switch, dry contact or RS232
- Receiver and infrared remote control
- Extension brackets for screens up to 60 cm

PSS Formats

1:1	1.33:1	1.60:1	1.78:1	2.35:1	2.37:1	2.40:1
	4:3	16:10	16:9	21:9		

Max Inceel

MFTS™ Max Floating Tensio

Fixing system for installations in false ceilings, which won't be accessible from the inside.

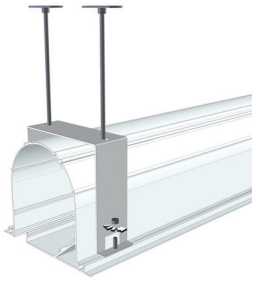

Fixing system for installations in false ceilings, which will be accessible from the inside.

Max Inceel MFTS is a big size in-ceiling motorized screen studied to disappear into a false ceiling and be visible only when it is in use, representing an aesthetical and functional innovative solution. The tab-tensioned version comes with black borders included and the maximum size available is 568 cm of viewing area.
The very easy mounting system simplify all the installations stages, making this product user friendly, considering the remarcable size. Max Inceel MFTS can be equipped with two different fixing system, according to the intallation needs.
Fixing system for installations in false ceilings, which won't be accessible from the inside.

See page 74 for Technical data

MFTS™ Patented quality tensioning system

Tensioning system consisting of a double lower bar and tensioning cables. Lower bar consist of two weights, one of which is responsible for the vertical force of the material and the other associated with the tensioning cable system is responsible for the flatness of the material horizontally.

Create your own screen with the PSS

- **Personalized dimensions:** width and height
- **Motor type:** standard motor
- **Case:** available only with case
- **Case color:** standard in White Grinz. Optional in any other color for an extra cost
- **Standard Drop:** from 10 to 20 cm
- **Projection surface fall:** back (standard), front or reverse-roll (optional)
- **Side of command/motor:** right only

Projection Surfaces (see page 6)

- Vision White
- Vision Acoustik / Vision Macro Acoustik

Standard Accessories

- Kit containing eight 50 cm threaded bars for installation with maximum height of 1 m
- Unipolar switch
- End plates for closing the plasterboard

Optional Accessories

- Interface to drive the screen in radio frequency with remote control (not included), 12V trigger, unipolar switch, dry contact or RS232
- Receiver and infrared remote control
- Extension brackets for screens up to 60 cm

PSS Formats

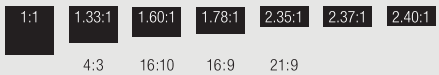

InSuperior

Adeo Screen's innovative in-ceiling model InSuperior FTS, with newly designed casing that can be integrated into a ceiling or false ceiling, features the new tensioning system with double lower bar and patented FTS™ Floating Tensio System.
A weight-efficient structure that eliminates deformation of the roller assembly structure allows to use more rigid fabrics and in larger sizes, offering the option of longer custom drop combinations.
This screen solution also allows a more convenient and quick installation thanks to the improved new installation brackets and the new lateral cover with magnets system. In addition the casing is provided with new safety cables.

See page
for Technical data 76

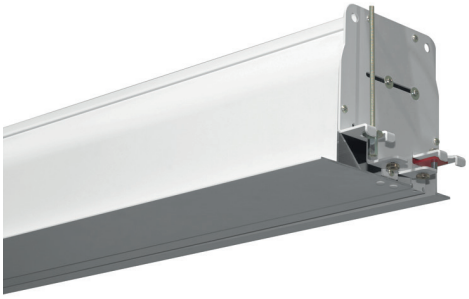

Case and installation system detail

InSuperior end plates

FTS™ Patented superior floating tensioning system
Tensioning system consisting of a double lower bar and tensioning cables. Lower bar consist of two weights, one of which is responsible for the vertical force of the material and the other associated with the tensioning cable system is responsible for the flatness of the material horizontally.

Create your own screen with the PSS

- **Personalized dimensions:** width and height
- **Motor type:** standard motor or radio integrated motor (optional)
- **Case:** available only with case
- **Case color:** standard in White Emboss. Optional in any other color for an extra cost
- **Standard Drop:** from 5 to 140 cm
- **Projection surface fall:** back (standard), front or reverse-roll (optional)
- **Side of command/motor:** right only

Projection Surfaces (see page 6)

- Reference White 2 / Reference Grey 2 / Reference White 2 Acoustik / Reference Grey 2 Acoustik
- Ambient Grey 2 / Ambient Grey
- Vision White / Vision White Pro
- Vision Acoustik
- Vision Rear DB available only without black borders

Standard Accessories

- Kit containing eight 50 cm threaded bars for installation with maximum height of 1 m
- Unipolar switch
- Remote control (only for radio integrated version)
- End plates for closing the plasterboard

Optional Accessories

- Interface to drive the screen in radio frequency with remote control (not included), 12V trigger, unipolar switch, dry contact or RS232
- Receiver and RF remote control
- Extension brackets for screens up to 60 cm

PSS Formats

1.33:1	1.60:1	1.78:1	2.35:1	2.37:1	2.40:1
4:3	16:10	16:9	21:9		

OnSuperior

FTS™ Floating Tensio

OnSuperior Tensio FTS is the screen born to meet the needs to install screens on very high walls or ceilings and to enable the projection light to be lowered to suit the spectator correctly.
The newly designed casing is suitable for on-wall or on-ceiling installation, features the new tensioning system with double lower bar and patented FTS™ Floating Tensio System
OnSuperior is available with a viewing area base up to 4500 mm and can also be supplied in a tensioned version without black borders.

See page 77 for Technical data

FTS™ Patented superior floating tensioning system
Tensioning system consisting of a double lower bar and tensioning cables. Lower bar consist of two weights, one of which is responsible for the vertical force of the material and the other associated with the tensioning cable system is responsible for the flatness of the material horizontally.

Create your own screen with the PSS

- **Personalized dimensions:** width and height
- **Motor type:** standard motor or radio integrated motor (optional)
- **Case:** available only with case
- **Case color:** standard in White Emboss. Optional in any other color for an extra cost
- **Standard Drop:** from 5 to 140 cm
- **Projection surface fall:** back (standard) or reverse-roll (optional)
- **Side of command/motor:** right (standard) or left (optional)

Projection Surfaces (see page 6)

- Reference White 2 / Reference Grey 2 / Reference White 2 Acoustik / Reference Grey 2 Acoustik
- Ambient Grey 2 / Ambient Grey
- Vision White / Vision White Pro
- Vision Acoustik
- Vision Rear DB available only without black borders

Standard Accessories

- Kit with wall or ceiling mount brackets
- Unipolar switch
- Remote control (only for radio integrated version)

Optional Accessories

- Interface to drive the screen in radio frequency with remote control (not included), 12V trigger, unipolar switch, dry contact or RS232
- Receiver and infrared remote control
- Extension brackets for screens up to 60 cm

PSS Formats

1.33:1	1.60:1	1.78:1	2.35:1	2.37:1	2.40:1
4:3	16:10	16:9	21:9		

Multiformat

A wide choice of formats, also in the tensioned version, with the Multiformat screen: surpassing the highest expectations of home cinema lovers.
Starting from two independent projection surfaces (a top masking surface and a rear projection surface), attached to two rollers: by synchronising these you can vary the format of the projection area, and obtain an image which is always edged in black, enhancing contrast. These are special, non-varnished anti-reflective black edges, with a width of 70 mm (while traditional edges are 30 or 50 mm wide).
The top surface is directly in contact with the rear surface, thanks to the vertical alignment of the rollers: this avoids the formation of shadows during projection. Planarity is ensured by the front drop of the surface, while the special anchoring to the roller eliminates any risks of horizontal crease marks. A perfect surface is possible at all times, thanks to a dedicated command that unrolls the surface completely, to facilitate cleaning operations. The winding is through Nice Era Mat radio integrated motors with remote control included.
The case is white (RAL 9016), with brushed aluminium lateral ends, which completely mask the screws. The anchoring system is simple and super-quick, for easy installation procedures.

See page for Technical data 78

Brushed Aluminium Ends

There is a very ample variety of formats to choose from.

For projectors with a 4:3 aspect ratio the following formats are available:
> 1.33 NTSC PAL 4:3
> 1.60 16:10
> 1.78 HDTV 16:9
> 1.85 Wide
> 2.35 Cinemascope 21:9

For projectors with a 16:9 aspect ratio the following formats are available:
> 1.78 HDTV 16:9
> 1.85 Wide
> 2.35 Cinemascope 21:9

Two more formats, with height lower than that of the starting format, can be added according to choice.

Numerous solutions, but only one tensioning system: a classic. Two elastic cables depart from the base and are threaded through dedicated same-size eyelets, placed along the sides of the screen: the arch that forms laterally ensures a harmonious aesthetic impact and a crease-free rolling, despite the presence of the eyelets.

Create your own screen with the PSS

> **Personalized dimensions:** width
> **Formats:** 8 different configurations
> **Motor type:** only radio integrated
> **Case:** available only with case
> **Case color:** standard in White Gloss. Optional in any other color for an extra cost
> **Standard Drop:** from 10 to 40 cm
> **Projection surface fall:** front only
> **Side of command/motor:** right only

Projection Surfaces (see page 6)

> Reference White 2 / Reference Grey 2 / Reference White 2 Acoustik / Reference Grey 2 Acoustik
> Ambient Grey 2 / Ambient Grey
> Vision White / Vision White Pro
> Vision Acoustik

Standard Accessories

> Kit with wall or ceiling mount brackets
> Master remote control
> Pilot remote control

Optional Accessories

> Extension brackets for screens up to 60 cm

PSS Formats

1.33:1	1.60:1	1.78:1	1.85:1	2.35:1	2.40:1
4:3	16:10	16:9		21:9	

Biformat

Tensio Classic

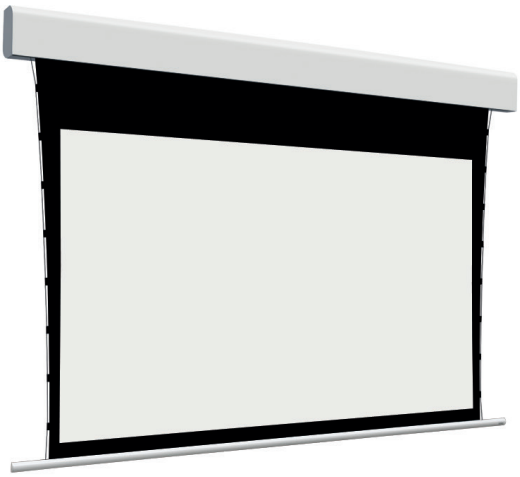

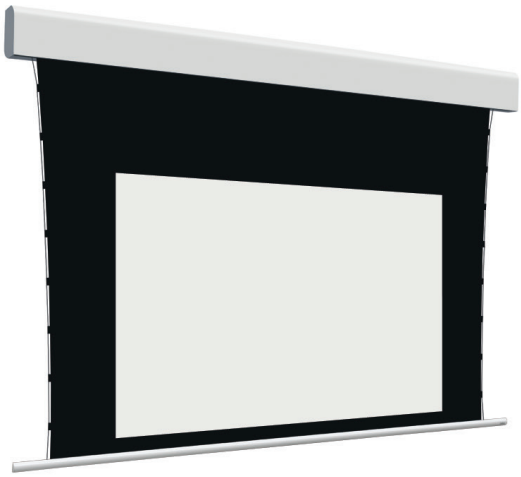

Biformat Tensio is a screen designed to meet even the highest expectations in the home cinema market. This is achieved thanks to a technical profile and a unique tensioning system. Inside the same case are two distinct projection surfaces of different formats, bordered with special non-varnished anti-reflective black edges. These enable to enhance the contrast of the projected image much more effectively than traditional 3 cm edges.
In addition to being positioned in direct contact with each other, to avoid focus loss, the projection surfaces are fixed to the roller, in such a way as to eliminate all risks of annoying horizontal crease marks. Furthermore, the front drop of the surface and the vertical alignment of the rollers ensure planarity. The motorized rolling is controlled through a wall-mounted switch or an integrated radio receiver.
The case is white (RAL 9016), with brushed aluminium lateral ends, which completely mask the screws. Owing to the practical anchoring system, use is immediately possible.

All you need to do is choose among the available formats:

> 1.33 NTSC PAL 4:3
> 1.78 HDTV 16:9
> 2.35 Cinemascope 21:9

All of them boast perfect tensioning, thanks to the classic tensioning system. Two elastic cables depart from the base and are threaded through dedicated same-size eyelets, placed along the sides of the screen: the arch that forms laterally ensures a harmonious aesthetic impact and a crease-free rolling, despite the presence of the eyelets.

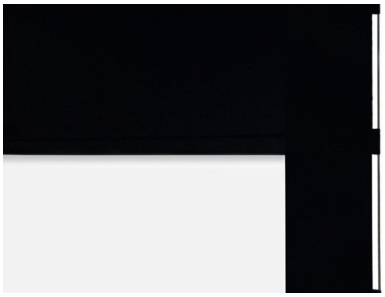

See page for Technical data 80

Create your own screen with the PSS

> **Personalized dimensions:** width
> **Motor type:** standard motor
> **Case:** available only with case
> **Case color:** standard in White Gloss. Optional in any other color for an extra cost
> **Standard Drop:** from 10 to 40 cm
> **Projection surface fall:** front only
> **Side of command/motor:** right only
> **Special option:** Deco Print

Projection Surfaces (see page 6)

> Reference White 2 / Reference Grey 2 / Reference White 2 Acoustik / Reference Grey 2 Acoustik
> Ambient Grey 2 / Ambient Grey
> Vision White / Vision White Pro
> Vision Acoustik

Standard Accessories

> Kit with wall or ceiling mount brackets
> 2 unipolar switches

Optional Accessories

> 2 Interfaces to drive the screen in radio frequency with remote control 2 channels (not included), 12V trigger, unipolar switch, dry contact or RS232
> Receiver and infrared remote control
> Extension brackets for screens up to 60 cm

PSS Formats

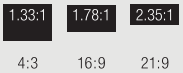

Alumid

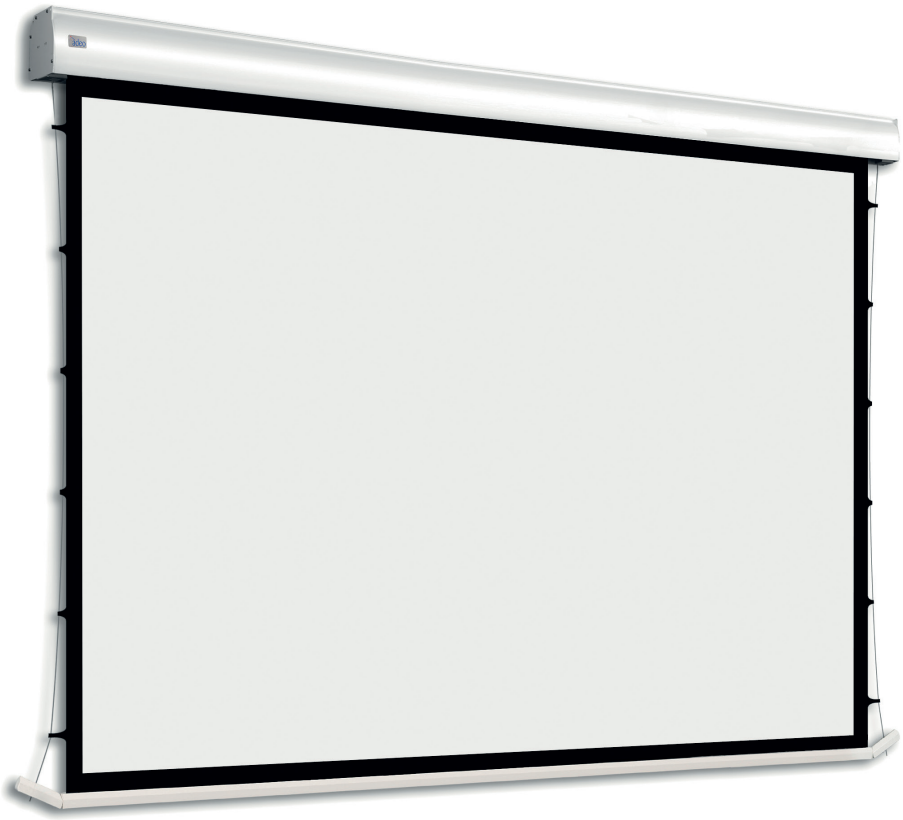

Marked by the quality of its in-built roller and solidity of the entire structure, this screen can be used in the Tensio version. The CTS (Constant Tensio System) provides constant self-tensioning through time, obtained through two counterweights hooked onto hinges at the ends of the screen's base, which tension the rigid cables threaded through the lateral eyelets. During screen rolling the eyelets remain outside the edge of the surface, thus avoiding the formation of annoying creases
A must for providing high quality projection even in large-scale environments and in the presence of a vast audience.

See page for Technical data 84

Create your own screen with the PSS

- **Personalized dimensions:** width and height
- **Motor type:** standard motor or radio integrated motor (optional)
- **Case:** available only with case
- **Case color:** standard in White Matte. Optional in any other color for an extra cost
- **Standard Drop:** from 10 to 45 cm
- **Projection surface fall:** back (standard), front or reverse-roll (optional)
- **Side of command/motor:** right (standard) or left (optional)

Projection Surfaces (see page 6)

- Reference Grey 2
- Ambient Grey
- Vision White / Vision White Pro
- Vision Acoustik / Vision Macro Acoustik
- Vision Rear DB available only without black borders

Standard Accessories

- Kit with wall or ceiling mount brackets
- Unipolar switch
- Remote control (only for radio integrated version)

Optional Accessories

- Interface to drive the screen in radio frequency with remote control (not included), 12V trigger, unipolar switch, dry contact or RS232
- Receiver and infrared remote control
- Extension brackets for screens up to 60 cm
- Screen lift

PSS Formats

1.33:1	1.60:1	1.78:1	2.35:1	2.37:1	2.40:1
4:3	16:10	16:9	21:9		

adeo

Max One

MFTS™ Max Floating Tensio

Max One MFTS, is the new maxi screen from Adeo Screen renewed and perfected, it comes with open casing underneath, also available with optional “casing closure”, to close off the housing completely.
Designed for practical installation, thanks to quick and easy assembly system.
The screen is also equipped with a safety roller fall system to avoid in any case the fall of the rolling tube.
Max One MFTS is the ideal solution for excellent large projection, even in the largest places, maximum size available 5.64 m viewing area.

See page for Technical data 86

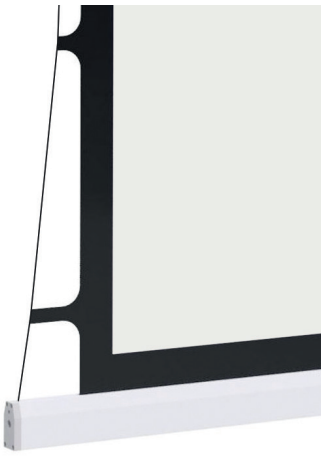

MFTS™ Patented quality tensioning system

Tensioning system consisting of a double lower bar and tensioning cables. Lower bar consist of two weights, one of which is responsible for the vertical force of the material and the other associated with the tensioning cable system is responsible for the flatness of the material horizontally.

Create your own screen with the PSS

- **Personalized dimensions:** width and height
- **Motor type:** standard motor
- **Case color:** standard in White Grinz. Optional in Black Grinz. Custom color for an extra cost
- **Standard Drop:** from 10 to 20 cm
- **Projection surface fall:** back (standard), front or reverse-roll (optional)
- **Side of command/motor:** right (standard) or left (optional)

Projection Surfaces (see page 6)

- Vision White
- Vision Acoustik
- Vision Macro Acoustik

Standard Accessories

- Kit with wall or ceiling mount brackets
- Unipolar switch

Optional Accessories

- Interface to drive the screen in radio frequency with infrared remote control (not included), 12V trigger, unipolar switch, dry contact or RS232
- Receiver and infrared remote control
- Casing closure option
- Extension brackets for screens up to 60 cm

PSS Formats

1.33:1	1.60:1	1.78:1	2.35:1	2.37:1	2.39:1	2.40:1
4:3	16:10	16:9	21:9			

Basic

Integrated motorized tensioned screen without casing.
This screen has been developed for professional installation, where the casing is not required.
Easy to install with installation brackets into the sides, is a screen that can be placed on wall or on ceiling in almost every spaces.
Basic Tensio can count on the CTS (Constant Tensio System), which ensures the constant self-tensioning of the screen by means of two counterweights hooked onto hinges placed at the end of the screen lower bar, devised for tensioning rigid cables threaded through lateral eyelets.
The screen can be supplied with standard motor or in RI version, with all surfaces available for motorized screen version and in version tensio all white.

See page for Technical data 89

Roller and installation system detail

CTS tensioning system detail

Create your own screen with the PSS

- **Personalized dimensions:** width and height
- **Motor type:** standard motor or radio integrated motor (optional)
- **Case:** available only without case
- **Projection surface fall:** back (standard), front or reverse-roll (optional)
- **Side of command/motor:** right (standard) or left (optional)

Projection Surfaces (see page 6)

- Reference White 2 / Reference Grey 2
- Ambient Grey 2 / Ambient Grey
- Vision White / Vision White Pro
- Vision Acoustik / Vision Macro Acoustik
- Vision Rear DB available only without black borders

Standard Accessories

- Kit with wall or ceiling mount brackets
- Unipolar switch

Optional Accessories

- Interface to drive the screen in radio frequency with remote control (not included), 12V trigger, unipolar switch, dry contact or RS232
- Receiver and infrared remote control
- Extension brackets for screens up to 60 cm

PSS Formats

1:1	1.33:1	1.60:1	1.78:1	2.35:1	2.37:1	2.39:1	2.40:1
	4:3	16:10	16:9	21:9			

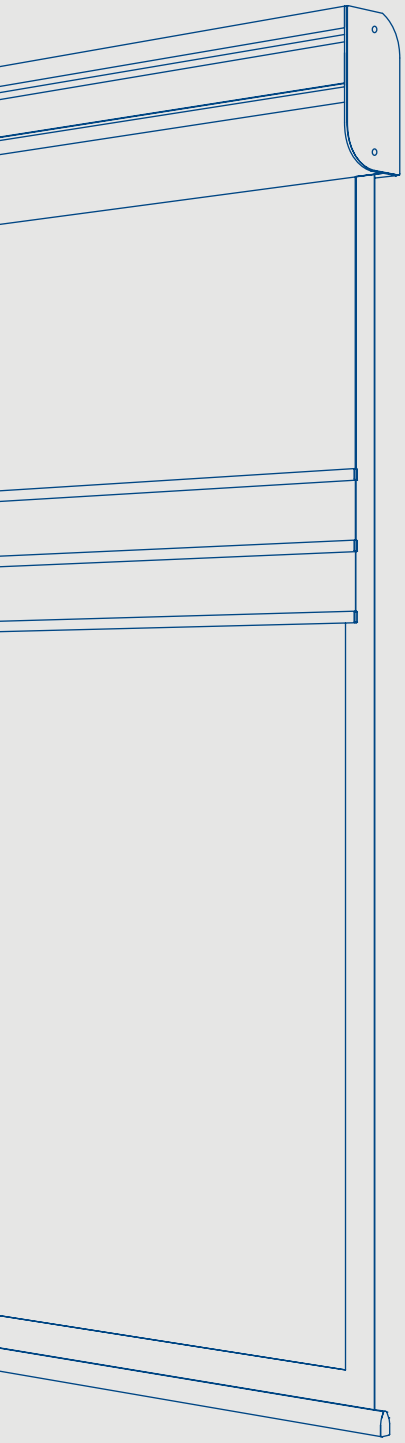

MOTORIZED NON-TENSIONED SCREENS

Rugby PLUS

The Rugby PLUS motorized screen has been developed for home installations where design, attention of detail and functionality are nowadays a must-have.

In this model, the side heads are composed of two parts which are made of milled aluminium and have a magnet fixing system that conceals the internal heads where the roller and motor are mounted, thus making the screen trim and linear.
The insertion of rubber bushings for the absorption of vibrations between the case and the roller ensure a noiseless product, greatly appreciated in residential environments.
This screen model has an improved fixing system that allows symmetrical installation regardless how the surface falls (front or rear).
Rugby PLUS also comes with an automatic lower bar locking system that guarantees perfect closure of the case.

Lowbar design detail

In the Rugby range, rollers of different diameters are used based on the size of the projection viewing area. Rolls of 90 mm are mounted on sizes over 2500 mm and up to 4500 mm of viewing area width. In the non-tensioned version, the Rugby PLUS screens are available with or without edges.
Case and lower bar are available in matt white or matt black.
Back fall for the surface is the standard. Front fall or reverse-roll are also available as options.
Motor is on the right side (standard). It can also be ordered on the left side (optional).

See page 61 for Technical data

Rugby PLUS

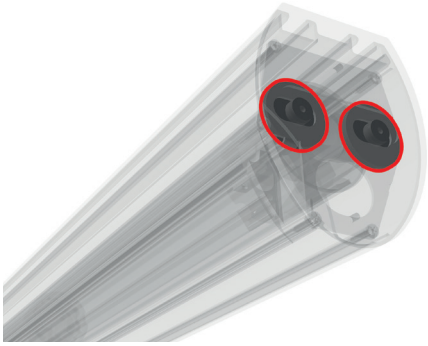

Quiet Rolling System
Using a double head enables the insertion of rubber bushings to absorb vibrations between the case and the roller. This system reduces the noise of the screen, which will be highly appreciated in residential environments.

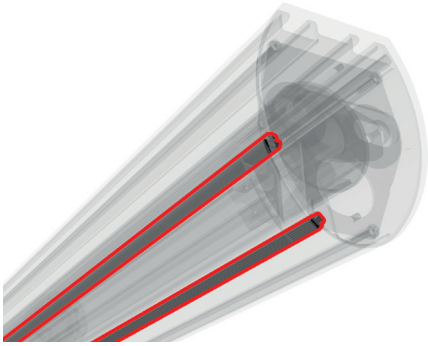

Softend Lowbar System
Designed using soft gaskets that dampen noise and absorb contacts when closing the lower bar.

SuperQuick Bracket Attachment System
The screen is supplied with an improved rapid and user-friendly fixing system for both wall and ceiling mounting. The clamping has been designed adopting symmetrical logics to enable both front and back mounting. The bracket kit consists of a single fixing unit (extruded aluminium bracket) and a single clamping unit (PVC moulded block), significantly reducing the number of parts.

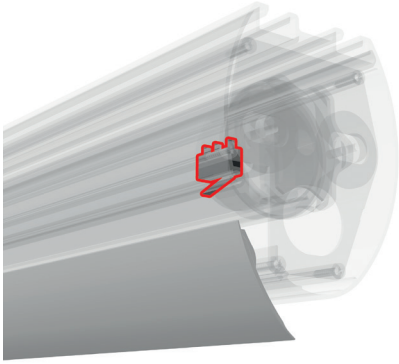

Auto Adjustment System
Another feature of the Rugby PLUS model is the use of a micro switch that ensures that the lower bar is always locked in the same position when closed. This auto-adjustment system means that there is no need for the customer to correct any stretching of the screen over time.

Create your own screen with the PSS

- **Personalized dimensions:** width and height
- **Motor type:** standard motor or radio integrated motor (optional)
- **Case:** with quick-installation system
- **Case color:** standard in White Matte. Optional in Black Matte. Custom color for an extra cost
- **Standard Drop:** from 5 to 45 cm
- **Projection surface fall:** back (standard), front or reverse-roll (optional)
- **Side of command/motor:** right (standard) or left (optional)

Projection Surfaces (see page 6)

- Reference White 2 / Reference Grey 2
- Ambient Grey 2
- Vision White / Vision White Pro
- Vision Acoustik
- Vision Rear DB available only without black borders

Standard Accessories

- SuperQuick Bracket Attachment System, quick installation wall or ceiling brackets
- Softend Lowbar System, rubber shock absorbers between the lower bar and case
- Quiet Rolling System, rubber shock absorbers between the roller and case
- Auto Adjustment System, limit switch automatic adjustment
- Unipolar switch
- Remote control (only for radio integrated version)

Optional Accessories

- Interface to drive the screen in radio frequency with remote control (not included), 12V trigger, unipolar switch, dry contact or RS232
- SRI motor option RF radio integrated standard receiver and transmitter
- SIO IO-homecontrol® motor option RF radio integrated with transmitter
- Receiver and infrared remote control
- Extension brackets for screensup to 60 cm
- Screen lift

PSS Formats

Rugby PRO

The Rugby PRO rolling screen has been designed for the professional channel, where ease of installation, durable materials and simplicity of use are required.

In this product line, the heads and lower bar are made of laminated iron to make the screen extremely robust.
The aluminium case has been designed with an innovative interlocking system that reduces the transmission of vibrations from the motor, limiting the noise when operating the screen.
The fixing system has been completely innovated and allows symmetrical installation with both front and back screen fall.

In the Rugby range, rollers of different diameters are used based on the size of the projection viewing area. Rolls of 90mm are mounted on sizes over 2500mm and up to 4500mm of viewing area width.
In the non-tensioned version, the Rugby PRO is available with or without edges.
Case and lower bar are available in matt white or matt black.
Back fall for the surface is the standard. Front and reverse-roll are also available as options.
Motor is on the right side (standard). It can also be ordered on the left side (optional).

See page for Technical data 66

Rugby PRO

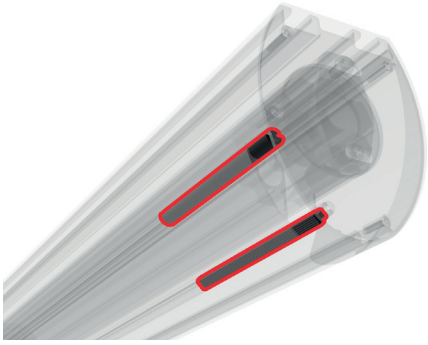

Softend Lowbar System
Designed using soft gaskets that dampen noise and absorb contacts when closing the lower bar.

SuperQuick Bracket Attachment System
The screen is supplied with an improved rapid and user-friendly fixing system for both wall and ceiling mounting. The clamping has been designed adopting symmetrical logics to enable both front and back mounting. The bracket kit consists of a single fixing unit (extruded aluminium bracket) and a single clamping unit (PVC moulded block), significantly reducing the number of parts.

Lowbar design detail

(Optional) Screen with mechanical motor and radio receiver installed inside the casing (the receiver is not inside of the motor, like with a standard radio integrated motor).

Create your own screen with the PSS

- **Personalized dimensions:** width and height
- **Motor type:** standard motor or motor with RF receiver integrated in the casing (optional)
- **Case:** with quick-installation system
- **Case color:** standard in White Matte. Optional in Black Matte. Custom color for an extra cost
- **Standard Drop:** from 5 to 45 cm
- **Projection surface fall:** back (standard), front or reverse-roll (optional)
- **Side of command/motor:** right (standard) or left (optional)

Projection Surfaces (see page 6)

- Reference White 2 / Reference Grey 2
- Ambient Grey 2
- Vision White / Vision White Pro
- Vision Acoustik
- Vision Rear DB available only without black borders
- Chroma Key, only without black borders

Standard Accessories

- SuperQuick Bracket Attachment System, quick installation wall or ceiling brackets
- Softend Lowbar System, rubber shock absorbers between the lower bar and case
- Unipolar switch
- Remote control (only for radio integrated version)

Optional Accessories

- Interface to drive the screen in radio frequency with remote control (not included), 12V trigger, unipolar switch, dry contact or RS232
- Receiver and infrared remote control
- Extension brackets for screens up to 60 cm
- Screen lift

PSS Formats

1:1	1.33:1	1.60:1	1.78:1	2.35:1	2.37:1	2.39:1	2.40:1
	4:3	16:10	16:9	21:9			

Inceel

When aesthetics are a vital necessity in the décor of your home and office spaces, Adeo responds with Inceel, the screen that is visible only when it is in use. Owing to the innovative assembly system the structure is positioned inside a false ceiling and the characteristic threaded bars are height-adjusted by means of a thread lock to suit individual practical requirements. This technique allows a quick and straightforward installation at a reasonable cost, whether carried out autonomously or by third parties.
Practicality meets aesthetics: by applying two plugs on the ends of the case the anchoring system is hidden and the visual impact significantly reduced, thereby favouring an overall harmonization with the surrounding ambient.
Inceel is the ideal solution for enjoying total and uncluttered freedom in one's home or office spaces: the screen is there but it doesn't show.
Available with 50 or 70 mm lateral black borders.

See page 7 for Technical data

Create your own screen with the PSS

- **Personalized dimensions:** width and height
- **Motor type:** standard motor or radio integrated motor (optional)
- **Case:** available only with case
- **Case color:** standard in White Matte. Optional in any other color for an extra cost
- **Standard Drop:** from 5 to 45 cm
- **Projection surface fall:** back (standard), front or reverse-roll (optional)
- **Side of command/motor:** right only

Projection Surfaces (see page 6)

- Reference White 2 / Reference Grey 2
- Ambient Grey 2
- Vision White / Vision White Pro
- Vision Acoustik
- Vision Rear DB available only without black borders
- Chroma Key, only without black borders

Standard Accessories

- Kit containing eight 50 cm threaded bars for installation with maximum height of 1 m
- Unipolar switch
- Remote control (only for radio integrated version)
- End plates for closing the plasterboard

Optional Accessories

- Interface to drive the screen in radio frequency with remote control (not included), 12V trigger, unipolar switch, dry contact or RS232
- Receiver and infrared remote control
- Extension brackets for screens up to 60 cm

PSS Formats

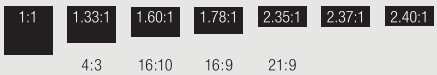

Max Inceel

Max Inceel is a large size in-ceiling motorized screen specially designed for mounting in false ceiling and be visible only when it is in use, representing an aesthetical and functional innovative solution.
Mainly suitable for big size rooms, it is available up to size of 6.5 meters of projection viewing area without black borders in format 16:9, 16:10 and 21:9. Heavy duty powder-coated aluminum case in white wrinkle pattern finish equipped with a very easy mounting system that simplifies all the installations stages, making this product user friendly, considering the remarcable size.
Max Inceel can be equipped with two different fixing system, according to the intallation needs.
Fixing system for installations in false ceilings, which won't be accessible from the inside.

Fixing system for installations in false ceilings, which won't be accessible from the inside.

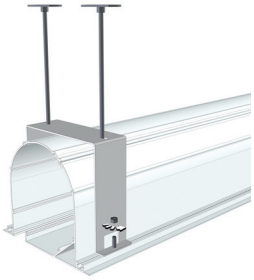

Fixing system for installations in false ceilings, which will be accessible from the inside.

See page for Technical data 75

Create your own screen with the PSS

- **Personalized dimensions:** width and height
- **Motor type:** standard motor
- **Case:** available only with case
- **Case color:** standard in White Grinz. Optional in any other color for an extra cost
- **Projection surface fall:** back (standard), front or reverse-roll (optional)
- **Side of command/motor:** right only

Projection Surfaces (see page 6)

- Vision White
- Vision Acoustik / Vision Macro Acoustik

Standard Accessories

- Kit containing eight 50 cm threaded bars for installation with maximum height of 1 m
- Unipolar switch
- End plates for closing the plasterboard

Optional Accessories

- Interface to drive the screen in radio frequency with remote control (not included), 12V trigger, unipolar switch, dry contact or RS232
- Receiver and infrared remote control
- Extension brackets for screens up to 60 cm

PSS Formats

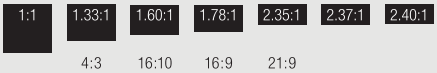

Multiformat

Multiformat was especially created by Adeo for real connoisseurs of home cinema. This screen is distinguished by the presence of two independent projection surfaces (a top masking surface and a rear projection surface), attached to two rollers: by synchronising them the format of the projection area can be varied, to obtain an image which is always bordered with black edges, enhancing contrast. These are special, non-varnished anti-reflective black edges, with a width of 70 mm (while traditional edges are 30 or 50 mm wide).

It is important to note that the top surface is directly in contact with the rear surface, thanks to the vertical alignment of the rollers: this avoids the formation of shadows during projection. Planarity is ensured by the front drop of the surface, while the special anchoring to the roller eliminates any risks of horizontal crease marks. A perfect surface is possible at all times, thanks to a dedicated command that unrolls the canvas completely, to facilitate cleaning operations. The winding is through Nice Era Mat radio integrated motors with remote control included.

The case is white (RAL 9016), with brushed aluminium lateral ends, which completely mask the screws. The anchoring system is simple and super-quick, for easy installation.

See page for Technical data 79

Brushed Aluminium Ends

There is a very ample variety of formats to choose from.

For projectors with a 4:3 aspect ratio the following formats are available:

- 1.33 NTSC PAL 4:3
- 1.60 16:10
- 1.78 HDTV 16:9
- 1.85 Wide
- 2.35 Cinemascope 21:9

For projectors with a 16:9 aspect ratio the following formats are available:

- 1.78 HDTV 16:9
- 1.85 Wide
- 2.35 Cinemascope 21:9

Two more formats, with height lower than that of the starting format, can be added according to choice.

Create your own screen with the PSS

- **Personalized dimensions:** width
- **Formats:** 8 different configurations
- **Motor type:** only radio integrated
- **Case:** available only with case
- **Case color:** standard in White Gloss. Optional in any other color for an extra cost
- **Standard Drop:** from 10 to 40 cm
- **Projection surface fall:** front only
- **Side of command/motor:** right only

Projection Surfaces (see page 6)

- Reference White 2 / Reference Grey 2
- Ambient Grey 2
- Vision White / Vision White Pro
- Vision Acoustik

Standard Accessories

- Kit with wall or ceiling quick mount brackets
- Master remote control
- Pilot remote control

Optional Accessories

- Extension brackets for screens up to 60 cm

PSS Formats

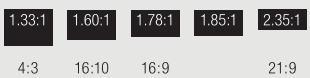

Biformat

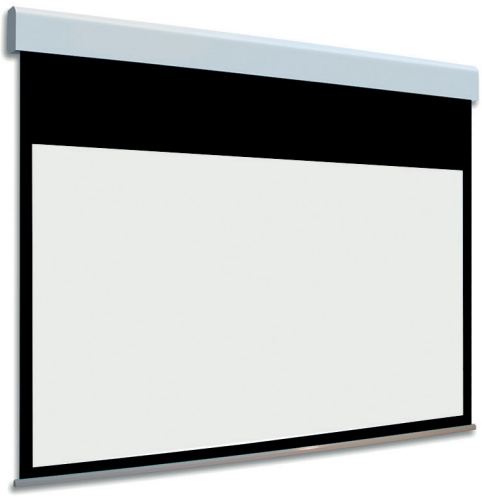

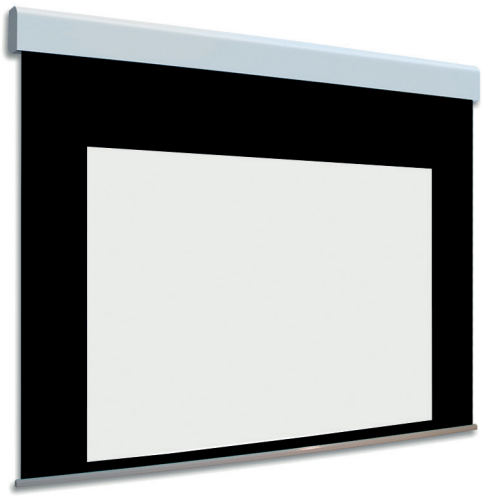

Two screens in one. Biformat is designed to satisfy the most demanding spectators of home cinema. Inside the same case are two distinct projection surfaces of different formats, bordered with special non-varnished anti-reflective black edges. These enable to enhance the contrast of the projected image much more effectively than traditional 30 or 50 mm edges. In addition to being positioned in direct contact with each other, to avoid focus loss, the projection surfaces are fixed to the roller, so as to eliminate the risk of horizontal crease marks. Furthermore, the front drop of the surface and the vertical alignment of the rollers ensure planarity. The motorized rolling is controlled through a wall-mounted switch or an integrated radio receiver.
Worthy of note is the white (RAL 9016) case, with brushed aluminium lateral ends, which completely mask the screws. Owing to the practical anchoring system, use is immediately possible.

Brushed Aluminium Ends

See page for Technical data 82

Create your own screen with the PSS

- **Personalized dimensions:** width
- **Motor type:** standard motor
- **Case:** available only with case
- **Case color:** standard in White Gloss. Optional in any other color for an extra cost
- **Standard Drop:** from 10 to 40 cm
- **Projection surface fall:** front only
- **Side of command/motor:** right only
- **Special option:** Deco Print

Projection Surfaces (see page 6)

- Reference White 2 / Reference Grey 2
- Ambient Grey 2
- Vision White / Vision White Pro
- Vision Acoustik
- Vision Rear DB available only without black borders
- Chroma Key, only without black borders

Standard Accessories

- Kit with wall or ceiling quick mount brackets
- 2 unipolar switches

Optional Accessories

- 2 Interfaces to drive the screen in radio frequency with remote control 2 channels (not included), 12V trigger, unipolar switch, dry contact or RS232
- Extension brackets for screens up to 60 cm
- Receiver and infrared remote control

PSS Formats

1.33:1	1.78:1	2.35:1
4:3	16:9	21:9

Alumid

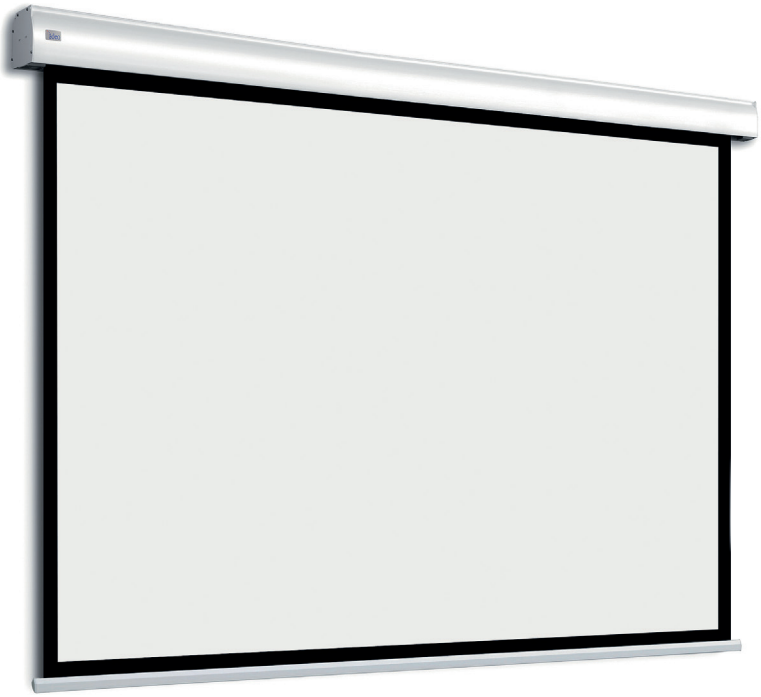

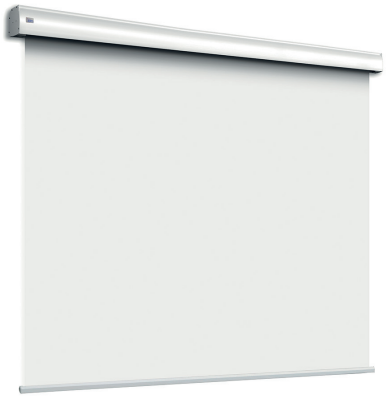

Alumid: large-scale formats for a unique style. Designed for screens with bases sized over 3.5 m, this model is equipped with the trademark built-in 108 mm diameter aluminium roller, contained in a case which is open underneath, for easy rolling of larger-scale screens. The result is an excellent tensioning of the projection surface. This product is also interesting from the installation point of view, which is based on the quick-assembly system, an operation which can be carried out autonomously and with significant time saving.
Sit back and enjoy the results: theatres, congress centres, auditorium spaces, Alumid ensures a striking projection performance even in the most challenging spaces.

See page for Technical data 85

Create your own screen with the PSS

- **Personalized dimensions:** width and height
- **Motor type:** tandard motor or radio integrated motor (optional)
- **Case color:** standard in White Matte. Optional in any other color for an extra cost
- **Standard Drop:** from 10 to 40 cm
- **Projection surface fall:** back (standard), front or reverse-roll (optional)
- **Side of command/motor:** right (standard) or left (optional)

Projection Surfaces (see page 6)

- Reference White 2 / Reference Grey 2
- Ambient Grey 2
- Vision White / Vision White Pro
- Vision Acoustik
- Vision Rear DB available only without black borders

Standard Accessories

- Kit with wall or ceiling quick mount brackets
- Unipolar switch
- Remote control (only for radio integrated version)

Optional Accessories

- Interface to drive the screen in radio frequency with remote control (not included), 12V trigger, unipolar switch, dry contact or RS232
- Receiver and infrared remote control
- Extension brackets for screens up to 60 cm

PSS Formats

Max One

Max One, is the new maxi screen from Adeo Screen renewed and perfected, it comes with open casing underneath, also available with optional “casing closure”, to close off the housing completely.
Max One is the solution for very large projection, used for large scale applications.
Designed for practical installation, thanks to quick and easy assembly system.
The screen is also equipped with a safety roller fall system to avoid in any case the fall of the rolling tube.

See page 87 for Technical data

Create your own screen with the PSS

- **Personalized dimensions:** width and height
- **Motor type:** standard motor
- **Case:** available only with case
- **Case color:** standard in White Grinz. Optional in Black Grinz. Custom color for an extra cost
- **Projection surface fall:** back (standard), front or reverse-roll (optional)
- **Side of command/motor:** right (standard) or left (optional)

Projection Surfaces (see page 6)

- Vision White
- Vision Acoustik / Vision Macro Acoustik

Standard Accessories

- Kit with wall or ceiling installation brackets
- Unipolar switch

Optional Accessories

- Interface to drive the screen in radio frequency with remote control (not included), 12V trigger, unipolar switch, dry contact or RS232
- Receiver and infrared remote control
- Casing closure option
- Extension brackets for screens up to 60 cm

PSS Formats

Big One

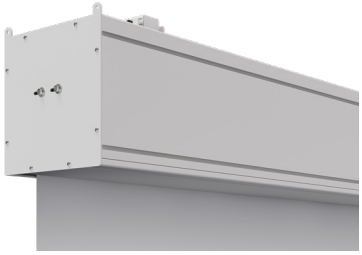

Designed for large installations in theatres, conference rooms and in all those spaces that require large projection, Big One is available in 4:3, 16/10 and 16/9 native aspect ratios. Depending on the chosen format, the total dimensions range from 700 to 850 cm in width of the viewing area, with a diagonal of 345 to 384 inches.
The Big One can be equipped with Vision White projection surfaces, characterized by a wide viewing angle, high brightness and absence of hot spots, and with the two acoustically transparent surfaces Vision Acoustik and Vision Macro Acoustik.

See page for Technical data 88

Create your own screen with the PSS

- **Personalized dimensions:** width and height
- **Motor type:** standard motor
- **Case:** available only with case
- **Case color:** available only in White Grinz
- **Projection surface fall:** back (standard), front or reverse-roll (optional)
- **Side of command/motor:** right (standard) or left (optional)

Projection Surfaces (see page 6)

- Vision White
- Vision Acoustik / Vision Macro Acoustik

Standard Accessories

- Kit with wall or ceiling installation brackets
- Unipolar switch

Optional Accessories

- Interface to drive the screen in radio frequency with remote control (not included), 12V trigger, unipolar switch, dry contact or RS232
- Receiver and infrared remote control

PSS Formats

1.33:1	1.60:1	1.78:1
4:3	16:10	16:9

Linear SE

Linear SE model dedicated to those who wish to get a competitive price product without forfeiting quality. Linear SE is a new motorized model with renewed aesthetics and a modern super-quick installation system. Technology and ease of installation are the main plus of this version, dedicated to professional installations, schools and small meeting rooms.
This screen model has not been conceived to be installed on-ceiling in the middle of a room; it will have to be installed against a wall.
Available with dimensions from 1.8 to 2.6 m viewing width in formats 1:1 / 4:3 / 16:9 / 16:10

See page for Technical data 94

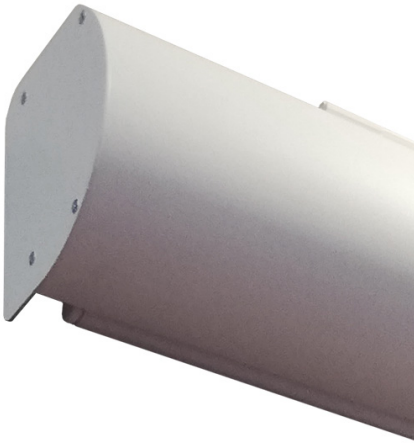

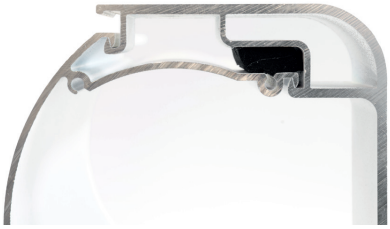

Quick installation system

Create your own screen with the PSS

- **Personalized dimensions:** width and height
- **Motor type:** standard motor
- **Case:** with quick-installation system
- **Case color:** standard in White Grinz or optional in Black Grinz
- **Projection surface** back (standard) or reverse-roll (optional)
- **Side of command/motor:** right only

Projection Surfaces (see page 6)

- Vision White / Vision White Pro
- Vision Rear DB available only without black borders
- Chroma Key, available only without black borders

Standard Accessories

- Kit with wall or ceiling quick installation brackets
- Unipolar switch

Optional Accessories

- Interface to drive the screen in radio frequency with remote control (not included), 12V trigger, unipolar switch, dry contact or RS232
- Receiver and infrared remote control

PSS Formats

1:1	1.33:1	1.60:1	1.78:1
	4:3	16:10	16:9

Basic

Integrated motorized screen without case.
This screen has been developed for professional installation, where the casing is not required.
Easy to install with installation brackets into the sides, is a screen that can be placed on wall or on ceiling in almost every spaces.
The screen can be supplied with standard motor or in RI version with black borders and with all surfaces available for motorized screen version.

See page for Technical data 91

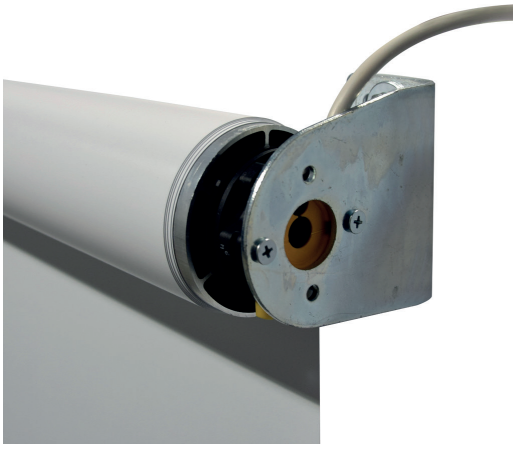

Roller and installation system detail

Create your own screen with the PSS

- **Personalized dimensions:** width and height
- **Motor type:** standard motor or radio integrated motor (optional)
- **Case:** available only without case
- **Projection surface fall:** back (standard), front or reverse-roll (optional)
- **Side of command/motor:** right (standard) or left (optional)

Projection Surfaces (see page 6)

- Reference White 2 / Reference Grey 2
- Ambient Grey 2
- Vision White / Vision White Pro
- Vision Acoustik / Vision Macro Acoustik
- Vision Rear DB available only without black borders
- Chroma Key, only without black borders

Standard Accessories

- Kit with wall or ceiling mount brackets
- Unipolar switch
- Remote control (only for radio integrated version)

Optional Accessories

- Interface to drive the screen in radio frequency with remote control (not included), 12V trigger, unipolar switch, dry contact or RS232
- Receiver and infrared remote control
- Extension brackets for screens up to 60 cm

PSS Formats

1:1	1.33:1	1.60:1	1.78:1	2.35:1	2.37:1	2.39:1	2.40:1
	4:3	16:10	16:9	21:9			

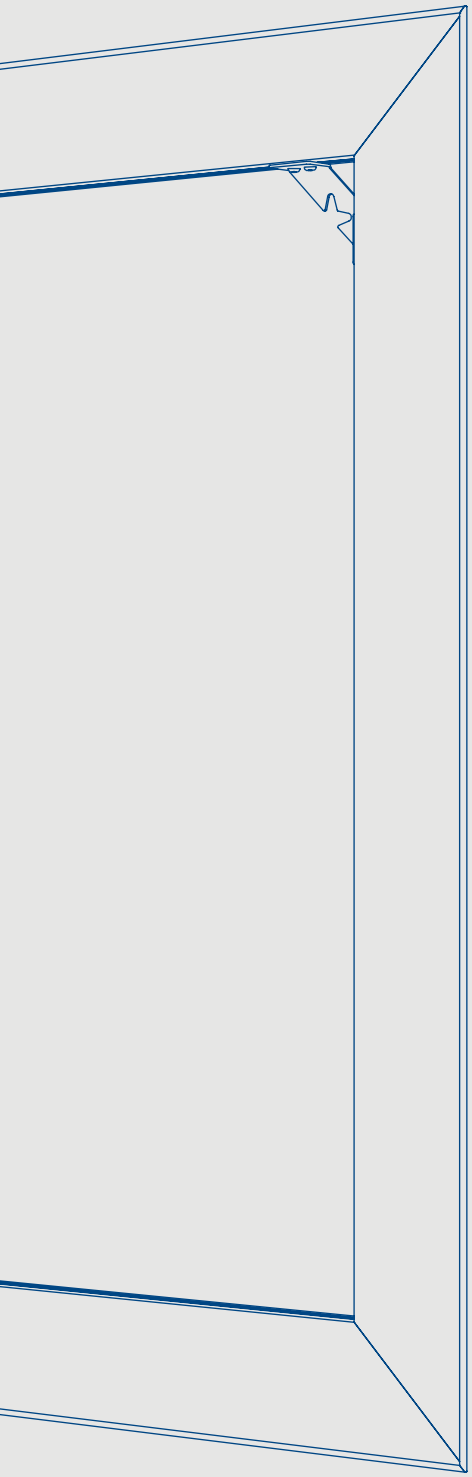

FIXED SCREENS

Plano | Plano Velvet

Plano

One of the most annoying effects on vision is caused by light reflecting off the frame of the screen. Extensive research into the structure of the profile, both from a functional and an aesthetic point of view, has resulted in the creation of Plano, the screen equipped with a special aluminium frame, angular on the internal side.
A solution designed to direct the reflection towards the outer edges of the screen instead of the projection surface or the audience. The profiles can be painted black, or coated in a velvet flock finish, which totally absorbs light and enhances the perception of contrast in the projected images. Tensioning is provided by elastic cables, which guarantee the perfect planarity of the surface, preventing any risk of undulation.

See page for Technical data 95

The main applications of this product are in the Home Cinema sector; its use in the domestic environment is favoured by a harmonious design and by the installation system incorporated into the profile: the wall-mounted bracket slides into the back of the frame and disappears, ensuring the total adherence of the frame to the wall.

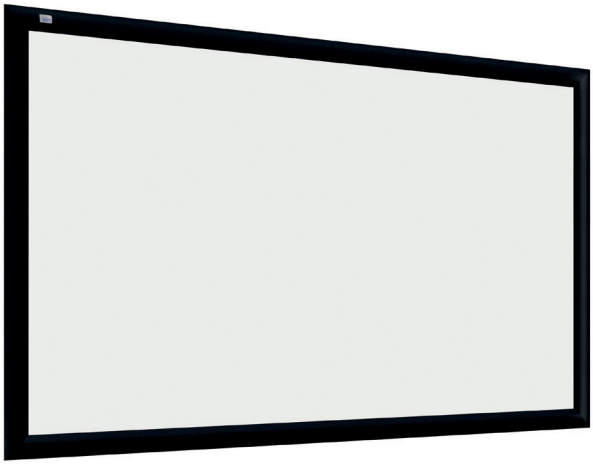

Create your own screen with the PSS

- **Personalized dimensions:** width and height
- **Profile color:** standard in Black Grinz. Optional in Black Flock (optional)

Projection Surfaces (see page 6)

- Reference White 2 / Reference Grey 2 / Reference White 2 Acoustik / Reference Grey 2 Acoustik
- Ambient Grey 2 / Ambient Grey / Ambient Grey 2 Acoustik
- Vision White / Vision White Pro
- Vision Acoustik
- Vision Rear DB available only without black borders

Standard Accessories

- Kit with wall-mount brackets
- Kit containing: elastics, iron rods and sliders for the assembly of the surface
- For the assembly of the frame: angles complete with screws and nuts

Optional Accessories

- Adjustable floor-mount stands and fastening adapters

PSS Formats

1.33:1	1.60:1	1.78:1	2.35:1
4:3	16:10	16:9	21:9

Plano Curved

An unique video experience for all home-cinema devotees: this aptly sums up this creation by Adeo Screen.
Would you like to immerse yourself completely in your favourite film? Try Plano Curved screen, and recreate that authentic theatre atmosphere: let each video projection surround you with images and become a totally involving emotional and sensory experience.
Plano Curved artfully blends expertise and innovation, incorporating the distinctive features of the Plano model while introducing a characteristic curved profile.
In addition to the product's outstanding perfomance, there are fundamental technical aspects that we feel should be highlighted: the profile's curvature and the optimal projection radius (based on the screen's dimensions) significantly improve the image's luminance uniformity. This solution can also be adopted with high-gain projection surfaces (such as HeliosWhite and Ambient Grey) with a native 2.35:1 format, eliminating any loss of luminosity at the edges that would normally occur when using a non-curved panoramic screen.
The profile's special black-velvet finish completely absorbs the light, enhancing the perception of contrast in the projected images. Available in 4:3, 16:10, 16:9 and 2.35:1 formats.

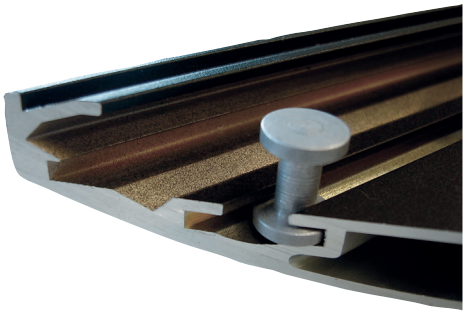

Plano Curved profile

See page for Technical data 95

Create your own screen with the PSS

- **Personalized dimensions:** width and height
- **Profile color:** Black Flock

Projection Surfaces (see page 6)

- Reference White 2 / Reference Grey 2 / Reference White 2 Acoustik / Reference Grey 2 Acoustik
- Ambient Grey 2 / Ambient Grey / Ambient Grey 2 Acoustik
- Vision White / Vision White Pro
- Vision Acoustik

Standard Accessories

- Kit with wall-mount brackets
- Kit containing: elastics, iron rods and sliders for the assembly of the surface
- For the assembly of the frame: angles complete with screws and nuts

Optional Accessories

- Adjustable floor-mount stands and fastening adapters

PSS Formats

1.33:1	1.60:1	1.78:1	2.35:1
4:3	16:10	16:9	21:9

FrameLess

FrameLess: the stylish screen. FrameLess is a borderless model whose sophisticated aesthetics create an optical illusion, with the screen blending into the wall on which it is mounted.
The projection surface hides the back frame from view, lending the screen a linear and minimal appearance.
What is immediately striking about FrameLess is the use of an innovative structural solution featuring a special aluminium profile (108x32 mm) that prevents distortion and ensures absolute flatness of the projection surface.
Tensioning being a key factor during projection, we have implemented a system for anchoring the canvas with metal springs that keep the projection fabric firmly stretched over time, avoiding any risk of rippling or creasing.
FrameLess is ideally suited both for home installations - where a width of up to 4 m is usually the most in demand - and for professional environments, such as hotels, meeting or conference rooms, where a base size of up to 7 m is required.
FrameLess is available with all our front-projection surfaces and comes with a magnet anchoring kit for wall-flush installation.

See page for Technical data 96

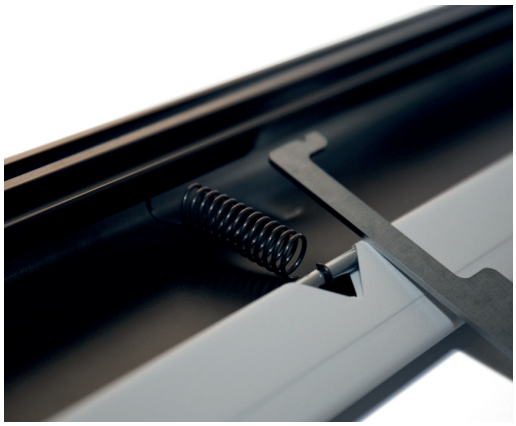

Tool provided for easy installation of the projection surface

Create your own screen with the PSS

> **Personalized dimensions:** width and height

Projection Surfaces (see page 6)

> Reference White 2 / Reference Grey 2 / Reference White 2 Acoustik / Reference Grey 2 Acoustik
> Ambient Grey 2 / Ambient Grey / Ambient Grey 2 Acoustik
> Vision White / Vision White Pro
> Vision Acoustik / Vision Macro Acoustik

Standard Accessories

> Kit with wall-mount brackets
> Kit containing springs, iron rods and fabric angles (for precise finishing)
> For the assembly of the frame: angles complete with screws

Optional Accessories

> Kit with ceiling brackets

PSS Formats

1:1	1.33:1	1.60:1	1.78:1	2.35:1	2.37:1	2.40:1
	4:3	16:10	16:9	21:9		

FrameLess Curved

An enveloping image is more involving. This is why we developed the curved version of FrameLess – for a totally immersive experience.
Capturing the viewer's attention with its curved screen, this is an admirable product that blends seamlessly into an elegant ambience while delivering high-quality images.
The aluminium profile (108x32 mm) prevents warping and ensures even greater flatness of the projection fabric, which is fastened to the back of the profile by a system of metal springs. This additional feature helps avoid any ripples or creases.
With the projection fabric covering its entire frame, FrameLess Curved engages in a dialogue with the surrounding wall and enhances the room like a furnishing accessory.
The effect is one of practical lightness.
Sizes range from 2 to 6 m and can be fitted with front-projection fabrics.

See page for Technical data 97

Create your own screen with the PSS

> **Personalized dimensions:** width and height

Projection Surfaces (see page 6)

> Reference White 2 / Reference Grey 2 / Reference White 2 Acoustik / Reference Grey 2 Acoustik
> Ambient Grey 2 / Ambient Grey / Ambient Grey 2 Acoustik
> Vision White / Vision White Pro
> Vision Acoustik / Vision Macro Acoustik

Standard Accessories

> Kit with wall-mount brackets
> Kit containing springs, iron rods and fabric angles (for precise finishing)
> For the assembly of the frame: angles complete with screws

PSS Formats 1.78:1 (16:9) 2.35:1 (21:9) 2.37:1 2.39:1 2.40:1

Prestige

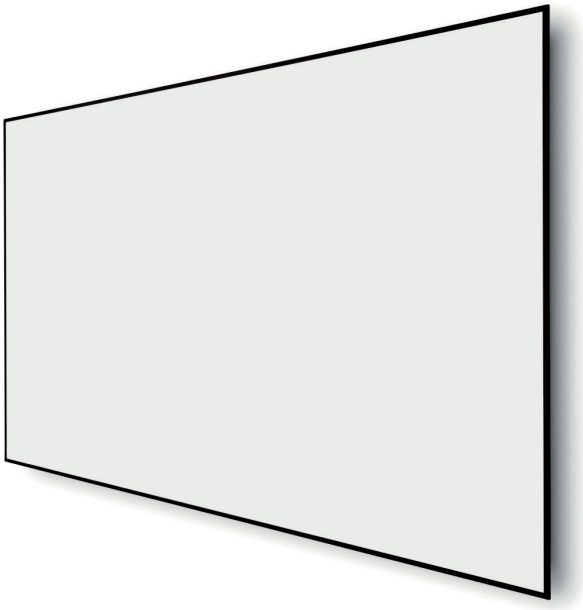

This model of our fixed-screen category evokes contemporary charm and quality. The concept underlying the modern design of the Prestige project focuses on regular, essential geometric forms. Prestige distinguishes itself through its black, ultra-slim, technologically revisited aluminium frame of only 10x6 mm in thickness, of extreme linearity, expressing the latest taste in the LED OLED monitors market.

To meet the needs of our Customers, this model can be fitted with a range of front-projection fabrics featuring a spring-tensioning system that ensures correct and constant tensioning.

To highlight certain details or to introduce an element of colour, Adeo Screen proposes the installation of optional LED back-lighting for a touch of illumination that lends warmth to the wall.

See page for Technical data 96

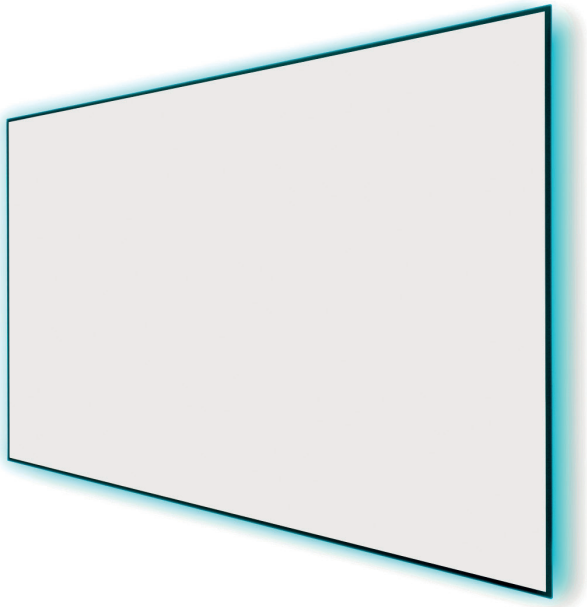

RGB Led strip option

Create your own screen with the PSS

- **Personalized dimensions:** width and height
- **Profile color:** standard in Black Matte. Optional in Black Flock

Projection Surfaces (see page 6)

- Reference White 2 / Reference Grey 2 / Reference White 2 Acoustik / Reference Grey 2 Acoustik
- Ambient Grey 2 / Ambient Grey / Ambient Grey 2 Acoustik
- Vision White / Vision White Pro
- Vision Acoustik / Vision Macro Acoustik

Standard Accessories

- Kit with wall-mount brackets
- > Kit containing springs, iron rods and fabric angles (for precise finishing)
- For the assembly of the frame: angles complete with screws

Optional Accessories

- Black velvet flock cover
- RGB Led back lighting
- Kit with ceiling brackets

PSS Formats 1.78:1 2.35:1 2.37:1 2.40:1

16:9 21:9

FramePro

A screen that offers a fourfold service. Following in the footsteps of Frame, FramePro features a structural aluminium frame – divided into several parts for easier transport – and particularly robust and hard wearing angles, which add solidity to the assembly. This model distinguishes itself by enabling four different types of configuration: depending on the chosen version, the projection surface can be front or rear mounted, by means of the traditional elastic bands or with snap buttons.

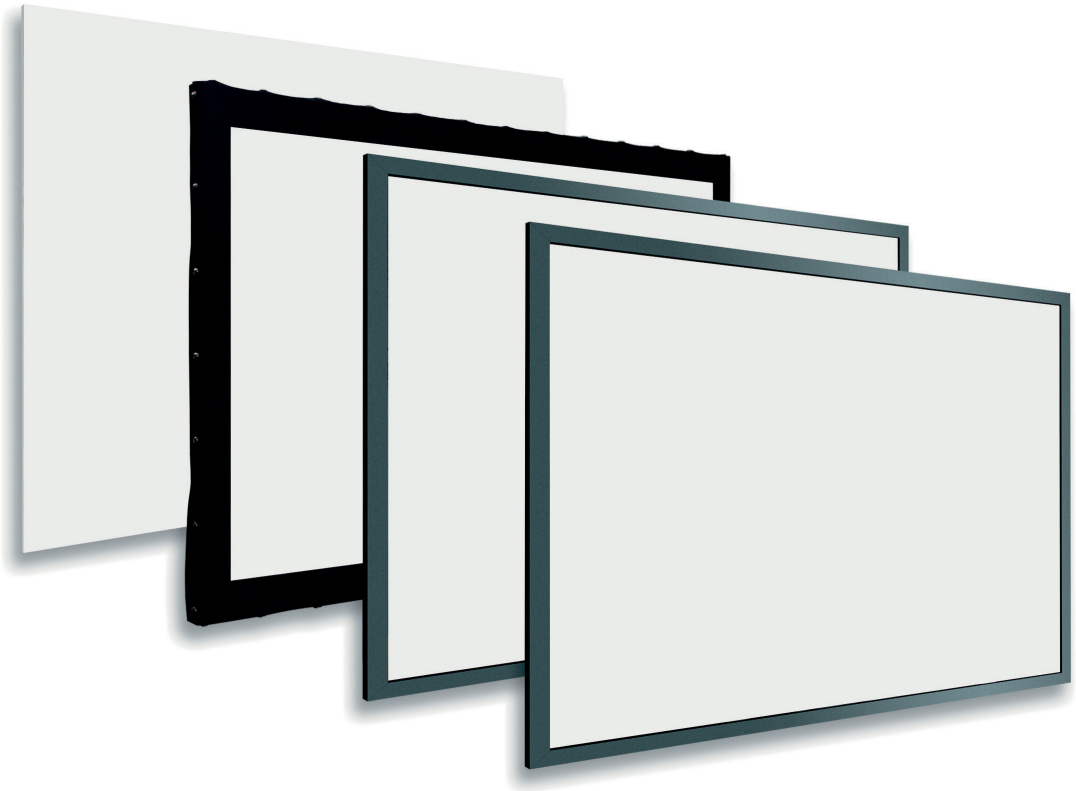

An additional option is the black flocked frame: the velour finish completely absorbs any light and enhances the perception of contrast in the projected images.

Unprecedented versatility, for the most demanding spectator and for the most atypical situations.

FramePro FE

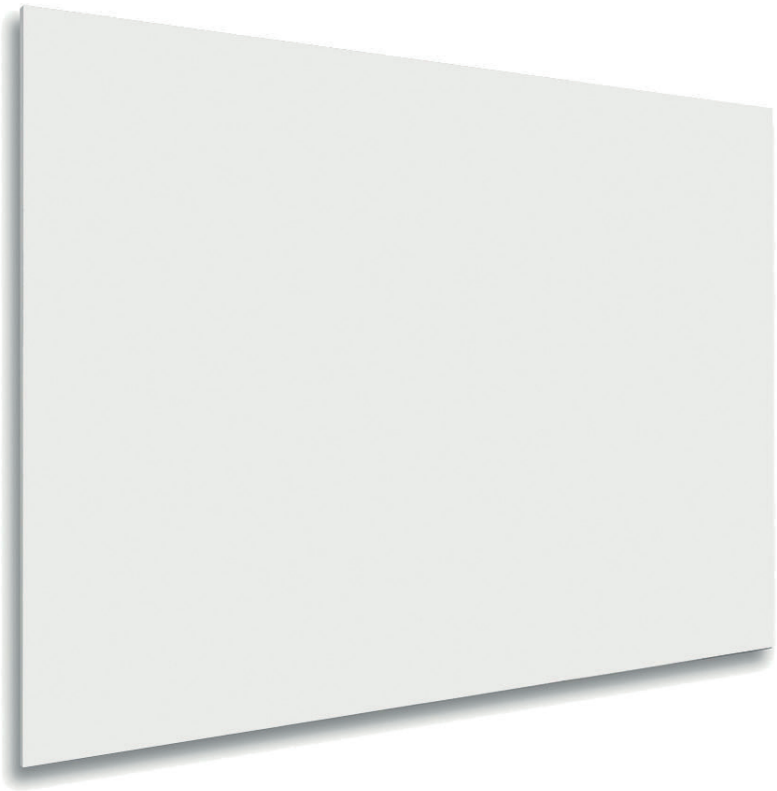

Easy projection surface installation thanks to elastic bands and rods

FramePro Front Elastic Bands

Version with front-mounted projection surface, applied with elastics

The best response to aesthetic demands and to the expectations of minimalist architecture: the projection surface conceals the structural parts of the screen, harmonising discreetly with the surrounding ambience.

The wall mount (all sizes) includes spacers: this solution has been designed especially for easy installation, and to separate the screen from the wall by a couple of centimetres where necessary (e.g. in case of backlighting). Alternatively, floor assembly is possible by means of specific professional stands. Sizes are customisable. The profile can be divided into several parts.

See page for Technical data 98

Create your own screen with the PSS

- **Personalized dimensions:** width and height
- **For transportation purposes:** base and/or height sections can be divided into two parts

Projection Surfaces (see page 6)

- Reference Grey 2
- Ambient Grey 2 / Ambient Grey
- Vision White Pro

Standard Accessories

- Kit with wall-mount brackets
- Kit containing elastics, iron rods, fabric angles (for precise finishing) and sliders for the assembly of the surface
- For the assembly of the frame: angles and joints (where applicalble) complete with screws and nuts

Optional Accessories

- Adjustable floor-mount stands and fastening adapters
- Kit with rings for anchoring the screen to tubular structures

PSS Formats

1.33:1	1.60:1	1.78:1	2.35:1
4:3	16:10	16:9	21:9

FramePro FB

FramePro Front Buttons
Version with front-mounted projection surface, applied with snap buttons

Particularly suitable for service, this proposal meets the expectations of those who prefer to apply the projection surface by means of snap buttons. A black edge is applied all around the border (where the buttons are), hiding any signs of wear resulting from repeated use, and typical of rental contexts on the profile (which is divided in several parts).
The screen can be installed by means of professional stands (floor assembly); on aluminium trusses; wall-mounted (all sizes) with a mount system integrated into the profile (the wall brackets are inserted into the rear part of the frame, ensuring complete adherence).

See page for Technical data 98

Button type front projection surface installation system

Create your own screen with the PSS

- **Personalized dimensions:** width and height
- **For transportation purposes:** base and/or height sections can be divided into two parts

Projection Surfaces (see page 6)

- Vision Fold 2 / Vision Fold Rear 2

Standard Accessories

- Kit with wall-mount brackets
- For the assembly of the frame: angles and joints (where applicalble) complete with screws and nuts

Optional Accessories

- Adjustable floor-mount stands and fastening adapters
- Kit with rings for anchoring the screen to tubular structures

PSS Formats

1.33:1	1.60:1	1.78:1	2.35:1
4:3	16:10	16:9	21:9

FramePro RE

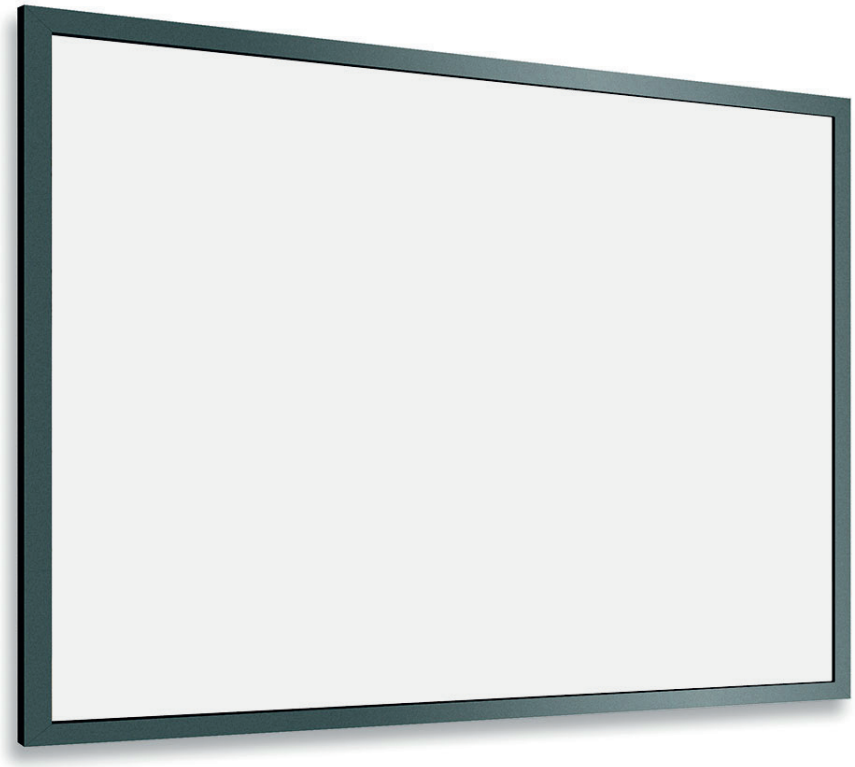

FramePro Rear Elastic Bands
Version with rear-mounted projection surface, applied with elastics.

This screen (all sizes) is installed flush with the wall, owing to the mounting system integrated into its profile, which conceals the assembly structure (the wall-mounted bracket inserted into the rear part of the frame). Ideal for fixed installations, and particularly for home theatre applications, it blends in harmoniously with the surrounding environment. This version is available with black varnished or flocked profile. Floor assembly can be achieved by means of professional stands. Sizes are customisable. The profile can be divided into several parts.

See page for Technical data 99

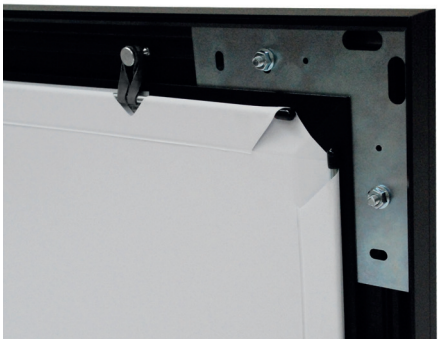

▲ Easy rear elastic bands installation system

Create your own screen with the PSS

- **Personalized dimensions:** width and height
- **For transportation purposes:** base and/or height sections can be divided into two parts
- **Profile color:** standard in Black Grinz. Optional in Black Flock (optional)

Projection Surfaces (see page 6)

- Reference White 2 / Reference Grey 2 / Reference White 2 Acoustik / Reference Grey 2 Acoustik
- Ambient Grey 2 / Ambient Grey / Ambient Grey 2 Acoustik
- Vision White / Vision White Pro
- Vision Acoustik / Vision Macro Acoustik
- Vision Rear DB available only without black borders

Standard Accessories

- Kit with wall-mount brackets
- Kit containing elastics, iron rods and sliders for the assembly of the surface
- For the assembly of the frame: angles and joints (where applicalble) complete with screws and nuts

Optional Accessories

- Adjustable floor-mount stands and fastening adapters
- Kit with rings for anchoring the screen to tubular structures
- Kit with ceiling brackets installation

PSS Formats

1.33:1	1.60:1	1.78:1	2.35:1
4:3	16:10	16:9	21:9

FramePro RB

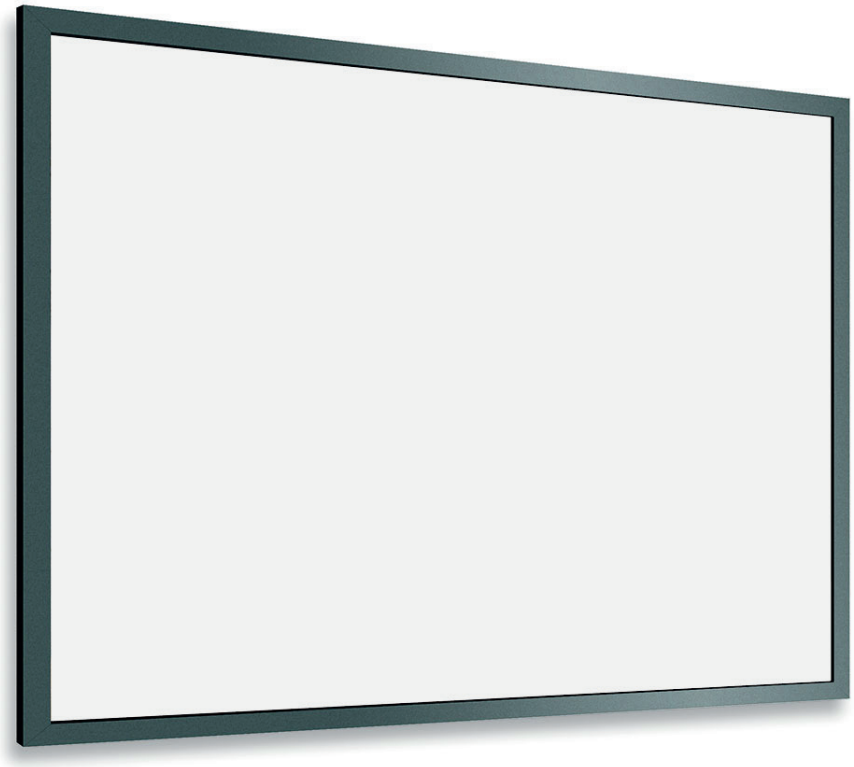

FramePro Rear Buttons
Version with rear-mounted projection surface, applied with snap buttons

Dedicated for those who prefer to apply the projection surface with snap buttons. Wall flush installation is possible with all sizes, owing to the integrated mount system with wall-mount brackets inserted into the rear of the frame.
In addition, infinite applications are also possible in the rental sector, thanks to the floor assembly (achieved by means of professional stands), or the aluminium truss option. Sizes are customisable. The profile is available in flocked or black varnished versions, and can be divided into several parts.

See page for Technical data 99

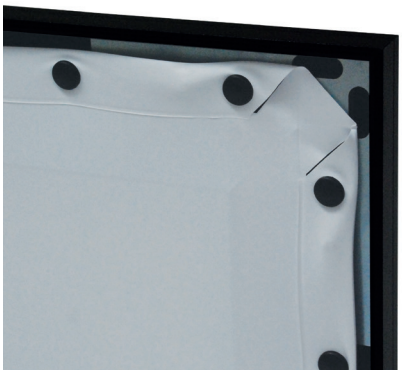

Rear buttons installation of the projection surface

Create your own screen with the PSS

- **Personalized dimensions:** width and height
- **For transportation purposes:** base and/or height sections can be divided into two parts
- **Profile color:** standard in Black Grinz. Optional in Black Flock

Projection Surfaces (see page 6)

- Vision Fold 2 / Vision Fold Rear 2

Standard Accessories

- Kit with wall-mount brackets
- Kit containing elastics, iron rods and cursor for the assembly of the surface
- For the assembly of the frame: angles and joints (where applicalble) complete with screws and nuts

PSS Formats

1.33:1	1.60:1	1.78:1	2.35:1
4:3	16:10	16:9	21:9

Cinema

Ample open spaces, sumptuous shows, highly effective installations: meet Cinema.
Our careful research into materials has led to the creation of extremely robust profiles capable of sustaining a base size of up to 24m. The screen has been further improved with the inclusion of structural bars every 4 or 5m, increasing the stability of the inner structure. Even the fabric-anchoring system has been redesigned to make assembly operations quicker and simpler: a very important aspect when mounting such imposing screens.
To lend the frame a modern look and to ensure it harmonises with its surroundings, the aluminium frame is completely enveloped in the fabric, which is fastened directly to the frame via a new anchoring system.
Cinema can be equipped with front-projection surfaces of the Adeo Screen range which, in products of this size (base width from 7 to 24 m), are welded vertically.

See page for Technical data 100

Elastic stretchers for an optimal tensioning and an easy installation of the projection surface

Create your own screen with the PSS

> **Personalized dimensions:** width and height

Projection Surfaces (see page 6)

> Reference White 2 / Reference Grey 2 / Reference White 2 Acoustik / Reference Grey 2 Acoustik
> Ambient Grey / Ambient Grey 2 Acoustik
> Vision White / Vision White Pro
> Vision Acoustik / Vision Macro Acoustik

Standard Accessories

> Kit with wall-mount brackets
> Kit containing elastics strecher and fabric angles (for precise finishing) for the assembly of the surface
> For the assembly of the frame: angles, joints and stiffeners complete with screws and nuts

Optional Accessories

> Kit brackets for installation on aluminium truss

PSS Formats 1.78:1 1.89:1 2.35:1 2.37:1 2.40:1

16:9 21:9

Cinema Curved

Cinema Curved is a new born in the family of fixed installation screens.
This new product, designed for wide open spaces and spectacular projections, engages the viewer with high-quality images and an exciting, high-impact cinema experience.
The fabric-anchoring system has been designed to make assembly operations quicker and simpler.
The alluminium frame is completely surrounded from the screen fabric, which is fastened directly to the frame structure through a new anchoring system.
Surface is always welded on the vertical side
Cinema Curved screens are produced in sizes from 7m to 24m.

See page for Technical data 101

Elastic stretchers and eyelet detail

Create your own screen with the PSS

> **Personalized dimensions:** width and height

Projection Surfaces (see page 6)

> Reference White 2 / Reference Grey 2 / Reference White 2 Acoustik / Reference Grey 2 Acoustik
> Ambient Grey / Ambient Grey 2 Acoustik
> Vision White / Vision White Pro
> Vision Acoustik / Vision Macro Acoustik

Standard Accessories

> Kit with wall-mount brackets
> Kit containing elastics strecher and fabric angles (for precise finishing) for the assembly of the surface
> For the assembly of the frame: angles, joints and stiffeners complete with screws and nuts

PSS Formats 1.78:1 1.89:1 2.35:1 2.37:1 2.40:1

16:9 21:9

SPECIAL SOLUTIONS

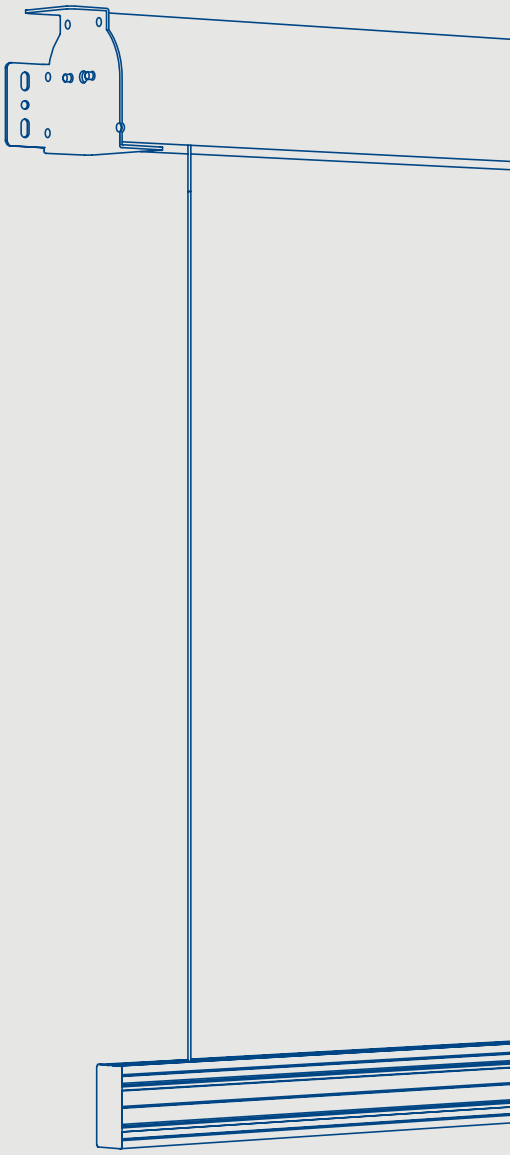

Lift Screen

Elevator for on-ceiling motorized screens, with powder-coated alluminium case in white color (RAL 9016). Casing with flat iron end caps, equipped with 4m long iron cables.
The maximum size of the screen you can install on the Lift Screen is 4.5m overall size for a weight of 60kg.

See page for Technical data 102

Create your own screen with the PSS

- **Personalized dimensions:** width of the casing and cable height
- **Motor type:** standard motor
- **Case color:** standard in White Matte or optional in Black Matte for an extra cost
- **Side of command/motor:** right only

Standard Accessories

- Kit with wall or ceiling mount brackets
- Unipolar switch

Optional Accessories

- 1 screen interface and 1 lift scree interface to drive both in radio frequency with 2 channels remote control (not included), 12V trigger, unipolar switch, dry contact or RS232
- Extension brackets for screens up to 60 cm

Easy Surface

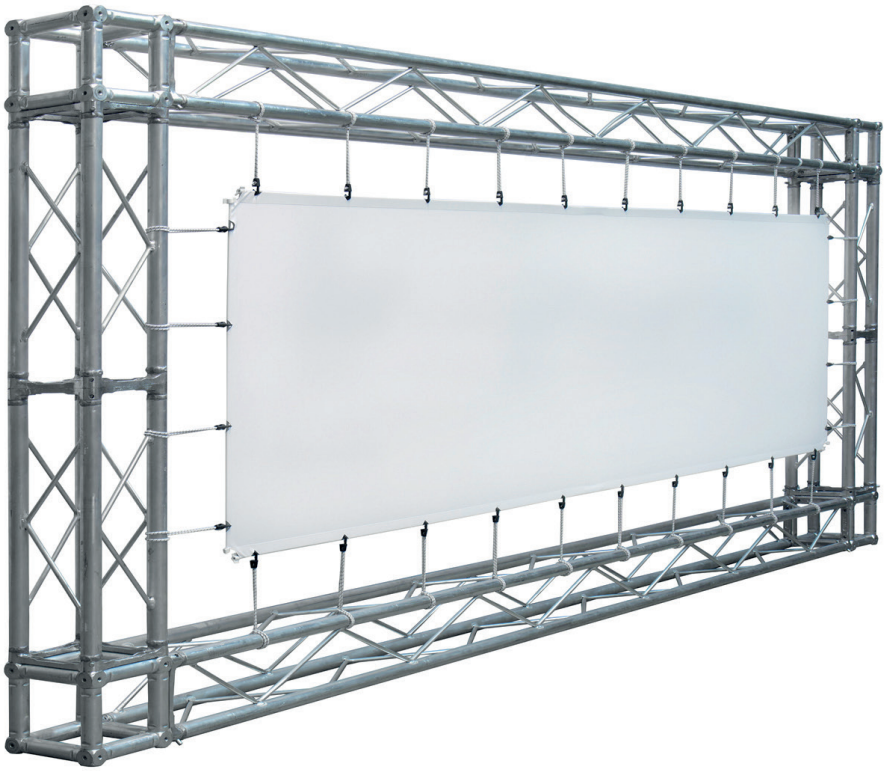

Versatility, practicality, and above all efficiency and excellent performance: in the service and rental contexts, tools are fundamental and must fulfil all of these requirements. When it comes to screens, the solution is Easy, the surface designed especially for rental, and particularly for use with aluminium truss structures. Iron rods are inserted into dedicated hems along the four sides; in various points along the perimeter formed by these iron rods, elastic cables anchor the screen to the aluminium truss. This system prevents any warping or distortion of the projection surface. The tensioning can be further personalized through a choice of elastic cable sizes.
The product is sold with a kit of 20 cm elastic cables; kits for special installations are available on demand with 35 and 55 cm cables. In order to optimize the packaging and transportation of the screen, the iron rods to be inserted into the base are always divided into two halves; one-piece rods are also available for the other three sides, depending on the end user's individual requirements.

See page for Technical data 103

Elastic stretchers detail

Create your own screen with the PSS

> **Personalized dimensions:** width and height

Projection Surfaces (see page 6)

> Reference White 2 / Reference Grey 2 / Reference White 2 Acoustik / Reference Grey 2 Acoustik
> Ambient Grey 2 / Ambient Grey / Ambient Grey 2 Acoustik
> Vision White / Vision White Pro
> Vision Acoustik / Vision Macro Acoustik
> Vision Rear DB available only without black borders
> Vision Fold 2 / Vision Fold Rear 2

Standard Accessories

> Kit with 20 cm elastics stretcher
> Wing screws

Optional Accessories

> Kit with 35 and 55 cm elastics stretcher for special installations

PSS Formats

1:1	1.33:1	1.60:1	1.78:1	1.89:1	2.35:1	2.37:1	2.40:1
	4:3	16:10	16:9		21:9		

Eyelet Surface

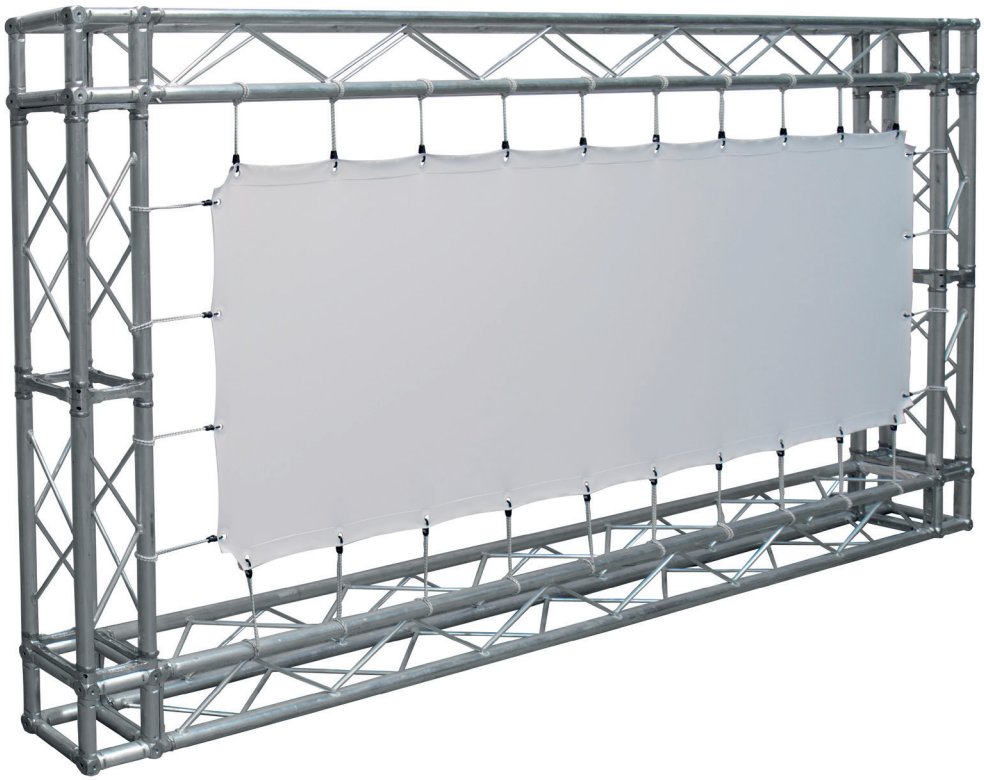

Projection surface to be fixed on alluminium truss structure, equipped with elastic cables to anchor the screen on the structure.
All around the entire perimeter there are reinforcement eyelets to prevent distortion of the projection surface. This solution is designed especially for rental and service usage where versatility and practicality are requested.
The tensioning can be further personalized through a choice of elastic cable sizes, the product is sold with a kit of 20 cm elastic cable; kits for special installations are available on request with 35 and 55cm cables.

See page for Technical data 104

Easy projection surface Installation with elastic cables

Create your own screen with the PSS

> **Personalized dimensions:** width and height

Projection Surfaces (see page 6)

> Reference White 2 / Reference Grey 2 / Reference White 2 Acoustik / Reference Grey 2 Acoustik
> Ambient Grey 2 / Ambient Grey / Ambient Grey 2 Acoustik
> Vision White / Vision White Pro
> Vision Acoustik / Vision Macro Acoustik
> Vision Rear DB available only without black bordes
> Vision Fold 2 / Vision Fold Rear 2

Standard Accessories

> Kit with 20 cm elastics stretcher

Optional Accessories

> Kit with 35 and 55cm elastics stretcher for special installation.

PSS Formats

1:1	1.33:1	1.60:1	1.78:1	1.89:1	2.35:1	2.37:1	2.40:1
	4:3	16:10	16:9		21:9		

Round

Round is the screen with a reduce curvature especially designed for simulators.
The screen has a 64x36.5 mm alluminium structure on which the projection surface is mounted with a system of metal springs that guarantees the correct surface tension.
Round was developed to meet a growing demand for simulator solution ideal for installations in control rooms, museums and in virtual reality contexts. Available in the full choice of surface of fixed screens range.
Suitable for floor installations only.

Create your own screen with the PSS

- **Personalized dimensions:** width and height
- **Profile color:** Black Matte

Projection Surfaces (see page 6)

- Reference White 2 / Reference Grey 2 / Reference White 2 Acoustik / Reference Grey 2 Acoustik
- Ambient Grey 2 / Ambient Grey / Ambient Grey 2 Acoustik
- Vision White / Vision White Pro
- Vision Acoustik / Vision Macro Acoustik

Standard Accessories

- Kit with floor-mount legs and brackets
- Kit containing springs, iron rods and fabric angles (for precise finishing) for the assembly of the surface
- For the assembly of the frame: angles and joints (where applicalble) complete with screws

Optional Accessories

- Fixed floor legs to create distance from floor to the screen

PSS Formats

1.33:1	1.60:1	1.78:1
4:3	16:10	16:9

TECHNICAL DATA

Rugby Plus

Tensio Classic 50 mm borders / without borders

Aspect Ratio	Viewing Width	Viewing Height	Diagonal Inches	Overall Width	Overall Height	Surface Width	Surface Height	Standard Drop	Total Maximum Drop	Packaging Dimensions	Net Weight	Gross Weight
	C	D	N	A	B	F	G	P	mm	mm	kg	kg
1,00 (1:1)	1620	1620	**90**	2080	1884	1720	1720	50	50	2260X150X180	15	17
	2120	2120	**118**	2580	2464	2220	2270	100	100	2760X210X200	20	22
	2620	2620	**146**	3080	2964	2720	2770	100	100	3260X210X200	26	28
1,33 (4:3)	1620	1218	**80**	2080	1482	1720	1318	50	450	2260X150X180	15	17
	2120	1594	**104**	2580	1858	2220	1694	50	450	2760X150X180	20	22
	2620	1970	**129**	3080	2314	2720	2120	100	450	3260X210X200	26	28
	3120	2346	**154**	3580	2690	3220	2496	100	450	3760X210X200	32	34
	3620	2722	**178**	4080	3066	3720	2872	100	450	4260X210X200	38	40
	4120	3098	**203**	4580	3442	4220	3248	100	350	4760X210X200	44	46
1,78 (16:9)	1620	910	**73**	2080	1174	1720	1010	50	450	2260X150X180	15	17
	2120	1191	**96**	2580	1455	2220	1291	50	450	2760X150X180	20	22
	2620	1472	**118**	3080	1816	2720	1622	100	450	3260X210X200	26	28
	3120	1753	**141**	3580	2097	3220	1903	100	450	3760X210X200	32	34
	3620	2034	**163**	4080	2378	3720	2184	100	450	4260X210X200	38	40
	4120	2315	**186**	4580	2659	4220	2465	100	450	4760X210X200	44	46
1,6 (16:10)	1620	1013	**75**	2080	1277	1720	1113	50	450	2260X150X180	15	17
	2120	1325	**98**	2580	1589	2220	1425	50	450	2760X150X180	20	22
	2620	1638	**122**	3080	1982	2720	1788	100	450	3260X210X200	26	28
	3120	1950	**145**	3580	2294	3220	2100	100	450	3760X210X200	32	34
	3620	2263	**168**	4080	2607	3720	2413	100	450	4260X210X200	38	40
	4120	2575	**191**	4580	2919	4220	2725	100	450	4760X210X200	44	46
2,35 (21:9)	1620	689	**69**	2080	953	1720	789	50	450	2260X150X180	15	17
	2120	902	**91**	2580	1166	2220	1002	50	450	2760X150X180	20	22
	2620	1115	**112**	3080	1459	2720	1265	100	450	3260X210X200	26	28
	3120	1328	**133**	3580	1672	3220	1478	100	450	3760X210X200	32	34
	3620	1540	**155**	4080	1884	3720	1690	100	450	4260X210X200	38	40
	4120	1753	**176**	4580	2097	4220	1903	100	450	4760X210X200	44	46
2,37	1620	684	**69**	2080	948	1720	784	50	450	2260X150X180	15	17
	2120	895	**91**	2580	1159	2220	995	50	450	2760X150X180	20	22
	2620	1105	**112**	3080	1449	2720	1255	100	450	3260X210X200	26	28
	3120	1316	**133**	3580	1660	3220	1466	100	450	3760X210X200	32	34
	3620	1527	**155**	4080	1871	3720	1677	100	450	4260X210X200	38	40
	4120	1738	**176**	4580	2082	4220	1888	100	450	4760X210X200	44	46
2,40	1620	675	**69**	2080	939	1720	775	50	450	2260X150X180	15	17
	2120	883	**90**	2580	1147	2220	983	50	450	2760X150X180	20	22
	2620	1092	**112**	3080	1436	2720	1242	100	450	3260X210X200	26	28
	3120	1300	**133**	3580	1644	3220	1450	100	450	3760X210X200	32	34
	3620	1508	**154**	4080	1852	3720	1658	100	450	4260X210X200	38	40
	4120	1717	**176**	4580	2061	4220	1867	100	450	4760X210X200	44	46

Custom sizes are available upon request

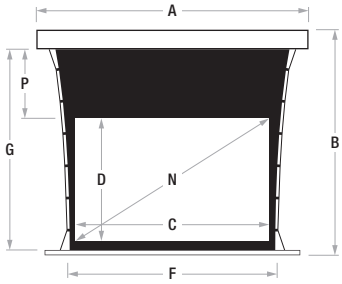

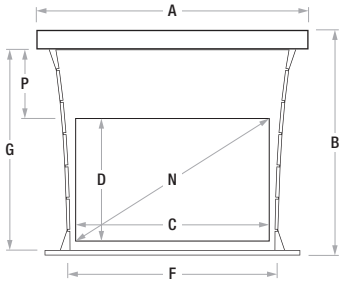

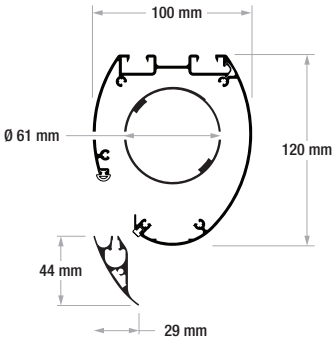

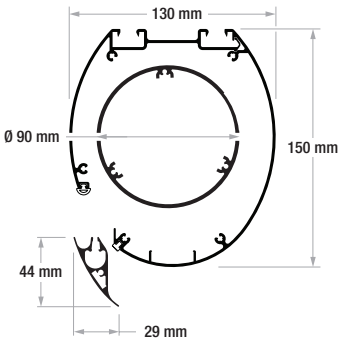

In certain circumstances, due to the surface's height, it is necessary to use a case with the rolling tube of 90 mm.

REACH COMPLIANCE · CE · RoHS COMPLIANT · M1 M2 Surface Fireproof Certifications

Rugby Plus

Tensio Classic 70 mm borders

Aspect Ratio	Viewing Width	Viewing Height	Diagonal Inches	Overall Width	Overall Height	Surface Width	Surface Height	Standard Drop	Total Maximum Drop	Packaging Dimensions	Net Weight	Gross Weight
	C	D	N	A	B	F	G	P	mm	mm	kg	kg
1,00 (1:1)	1580	1580	**88**	2080	1884	1680	1720	70	70	2260X150X180	15	17
	2080	2080	**116**	2580	2444	2180	2250	100	100	2760X210X200	20	22
	2580	2580	**144**	3080	2944	2680	2750	100	100	3260X210X200	26	28
1,33 (4:3)	1580	1188	**78**	2080	1492	1680	1328	70	450	2260X150X180	15	17
	2080	1564	**102**	2580	1868	2180	1704	70	450	2760X150X180	20	22
	2580	1940	**127**	3080	2304	2680	2110	100	450	3260X210X200	26	28
	3080	2316	**152**	3580	2680	3180	2486	100	450	3760X210X200	32	34
	3580	2692	**176**	4080	3056	3680	2862	100	450	4260X210X200	38	40
	4080	3068	**201**	4580	3432	4180	3238	100	350	4760X210X200	44	46
1,78 (16:9)	1580	888	**71**	2080	1192	1680	1028	70	450	2260X150X180	15	17
	2080	1169	**94**	2580	1473	2180	1309	70	450	2760X150X180	20	22
	2580	1449	**117**	3080	1813	2680	1619	100	450	3260X210X200	26	28
	3080	1730	**139**	3580	2094	3180	1900	100	450	3760X210X200	32	34
	3580	2011	**162**	4080	2375	3680	2181	100	450	4260X210X200	38	40
	4080	2292	**184**	4580	2656	4180	2462	100	450	4760X210X200	44	46
1,6 (16:10)	1580	988	**73**	2080	1292	1680	1128	70	450	2260X150X180	15	17
	2080	1300	**97**	2580	1604	2180	1440	70	450	2760X150X180	20	22
	2580	1613	**120**	3080	1977	2680	1783	100	450	3260X210X200	26	28
	3080	1925	**143**	3580	2289	3180	2095	100	450	3760X210X200	32	34
	3580	2238	**166**	4080	2602	3680	2408	100	450	4260X210X200	38	40
	4080	2550	**189**	4580	2914	4180	2720	100	450	4760X210X200	44	46
2,35 (21:9)	1580	672	**68**	2080	976	1680	812	70	450	2260X150X180	15	17
	2080	885	**89**	2580	1189	2180	1025	70	450	2760X150X180	20	22
	2580	1098	**110**	3080	1462	2680	1268	100	450	3260X210X200	26	28
	3080	1311	**132**	3580	1675	3180	1481	100	450	3760X210X200	32	34
	3580	1523	**153**	4080	1887	3680	1693	100	450	4260X210X200	38	40
	4080	1736	**175**	4580	2100	4180	1906	100	450	4760X210X200	44	46
2,37	1580	667	**68**	2080	971	1680	807	70	450	2260X150X180	15	17
	2080	878	**89**	2580	1182	2180	1018	70	450	2760X150X180	20	22
	2580	1089	**110**	3080	1453	2680	1259	100	450	3260X210X200	26	28
	3080	1300	**132**	3580	1664	3180	1470	100	450	3760X210X200	32	34
	3580	1511	**153**	4080	1875	3680	1681	100	450	4260X210X200	38	40
	4080	1722	**174**	4580	2086	4180	1892	100	450	4760X210X200	44	46
2,40	1580	658	**67**	2080	962	1680	798	70	450	2260X150X180	15	17
	2080	867	**89**	2580	1171	2180	1007	70	450	2760X150X180	20	22
	2580	1075	**110**	3080	1439	2680	1245	100	450	3260X210X200	26	28
	3080	1283	**131**	3580	1647	3180	1453	100	450	3760X210X200	32	34
	3580	1492	**153**	4080	1856	3680	1662	100	450	4260X210X200	38	40
	4080	1700	**174**	4580	2064	4180	1870	100	450	4760X210X200	44	46

Custom sizes are available upon request

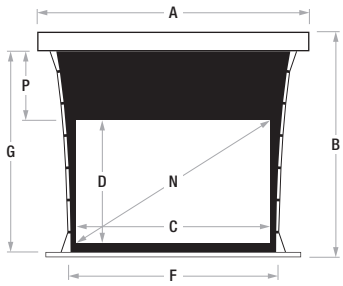

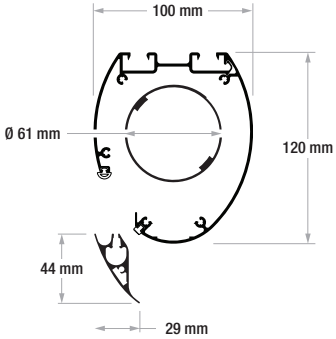

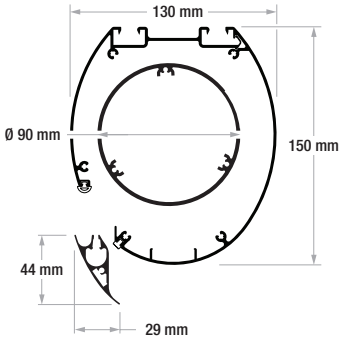

In certain circumstances, due to the surface's height, it is necessary to use a case with the rolling tube of 90 mm.

Surface Fireproof Certifications

Rugby Plus Without borders

Aspect Ratio	Viewing Width	Viewing Height	Diagonal Inches	Overall Width	Overall Height	Packaging Dimensions	Net Weight	Gross Weight
	C	D	N	A	B	mm	kg	kg
1,00 (1:1)	2000	2000	**111**	2080	2164	2260X150X180	15	17
	2500	2500	**139**	2580	2694	2760X210X200	20	22
	3000	3000	**167**	3080	3194	3260X210X200	26	28
1,33 (4:3)	2000	1504	**99**	2080	1668	2260X150X180	15	17
	2500	1880	**123**	2580	2044	2760X150X180	20	22
	3000	2256	**148**	3080	2450	3260X210X200	26	28
	3500	2632	**172**	3580	2826	3760X210X200	32	34
	4000	3008	**197**	4080	3202	4260X210X200	38	40
	4500	3383	**222**	4580	3577	4760X210X200	44	46
1,6 (16:10)	2000	1250	**93**	2080	1414	2260X150X180	15	17
	2500	1563	**116**	2580	1727	2760X150X180	20	22
	3000	1875	**139**	3080	2069	3260X210X200	26	28
	3500	2188	**162**	3580	2382	3760X210X200	32	34
	4000	2500	**186**	4080	2694	4260X210X200	38	40
	4500	2813	**209**	4580	3007	4760X210X200	44	46
1,78 (16:9)	2000	1124	**90**	2080	1288	2260X150X180	15	17
	2500	1404	**113**	2580	1568	2760X150X180	20	22
	3000	1685	**135**	3080	1879	3260X210X200	26	28
	3500	1966	**158**	3580	2160	3760X210X200	32	34
	4000	2247	**181**	4080	2441	4260X210X200	38	40
	4500	2528	**203**	4580	2722	4760X210X200	44	46
2,35 (21:9)	2000	851	**86**	2080	1015	2260X150X180	15	17
	2500	1064	**107**	2580	1228	2760X150X180	20	22
	3000	1277	**128**	3080	1471	3260X210X200	26	28
	3500	1489	**150**	3580	1683	3760X210X200	32	34
	4000	1702	**171**	4080	1896	4260X210X200	38	40
	4500	1915	**193**	4580	2109	4760X210X200	44	46
2,37	2000	844	**85**	2080	1008	2260X150X180	15	17
	2500	1055	**107**	2580	1219	2760X150X180	20	22
	3000	1266	**128**	3080	1460	3260X210X200	26	28
	3500	1477	**150**	3580	1671	3760X210X200	32	34
	4000	1688	**171**	4080	1882	4260X210X200	38	40
	4500	1899	**192**	4580	2093	4760X210X200	44	46
2,39	2000	837	**85**	2080	1001	2260X150X180	15	17
	2500	1046	**107**	2580	1210	2760X150X180	20	22
	3000	1255	**128**	3080	1449	3260X210X200	26	28
	3500	1464	**149**	3580	1658	3760X210X200	32	34
	4000	1674	**171**	4080	1868	4260X210X200	38	40
	4500	1883	**192**	4580	2077	4760X210X200	44	46
2,40	2000	833	**85**	2080	997	2260X150X180	15	17
	2500	1042	**107**	2580	1206	2760X150X180	20	22
	3000	1250	**128**	3080	1444	3260X210X200	26	28
	3500	1458	**149**	3580	1652	3760X210X200	32	34
	4000	1667	**171**	4080	1861	4260X210X200	38	40
	4500	1875	**192**	4580	2069	4760X210X200	44	46

Custom sizes are available upon request

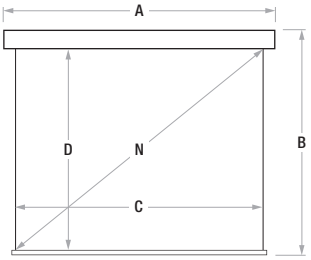

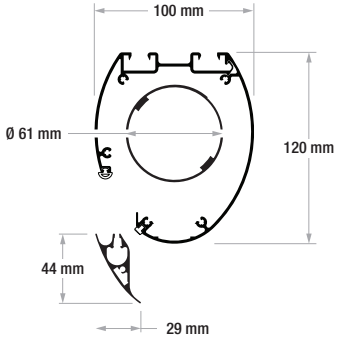

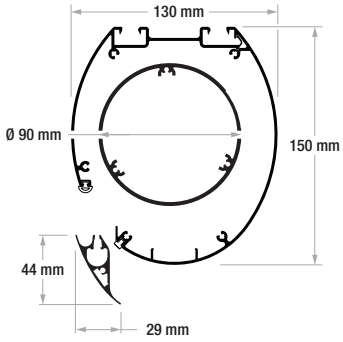

In certain circumstances, due to the surface's height, it is necessary to use a case with the rolling tube of 90 mm.

Surface Fireproof Certifications

Rugby Plus 50 mm borders

Aspect Ratio	Viewing Width	Viewing Height	Diagonal Inches	Overall Width	Overall Height	Surface Width	Surface Height	Standard Drop	Total Maximum Drop	Packaging Dimensions	Net Weight	Gross Weight
	C	D	N	A	B	F	G	P	mm	mm	kg	kg
1,00 (1:1)	1900	1900	**106**	2080	2164	2000	2000	50	50	2344X150X180	15	17
	2400	2400	**134**	2580	2694	2500	2500	100	100	2874X210X200	20	22
	2900	2900	**161**	3080	3244	3000	3050	100	100	3374X210X200	26	28
1,33 (4:3)	1900	1429	**94**	2080	1693	2000	1529	50	450	2080X150X180	15	17
	2400	1805	**118**	2580	2069	2500	1905	50	450	2580X150X180	20	22
	2900	2180	**143**	3080	2524	3000	2330	100	450	3080X210X200	26	28
	3400	2556	**167**	3580	2900	3500	2706	100	450	3580X210X200	32	34
	3900	2932	**192**	4080	3276	4000	3082	100	450	4080X210X200	38	40
	4400	3308	**217**	4580	3652	4500	3458	100	150	4580X210X200	44	46
1,6 (16:10)	1900	1188	**88**	2080	1452	2000	1288	50	450	2080X150X180	15	17
	2400	1500	**111**	2580	1764	2500	1600	50	450	2580X150X180	20	22
	2900	1813	**135**	3080	2157	3000	1963	100	450	3080X210X200	26	28
	3400	2125	**158**	3580	2469	3500	2275	100	450	3580X210X200	32	34
	3900	2438	**181**	4080	2782	4000	2588	100	450	4080X210X200	38	40
	4400	2750	**204**	4580	3094	4500	2900	100	450	4580X210X200	44	46
1,78 (16:9)	1900	1067	**86**	2080	1331	2000	1167	50	450	2080X150X180	15	17
	2400	1348	**108**	2580	1612	2500	1448	50	450	2580X150X180	20	22
	2900	1629	**131**	3080	1973	3000	1779	100	450	3080X210X200	26	28
	3400	1910	**154**	3580	2254	3500	2060	100	450	3580X210X200	32	34
	3900	2191	**176**	4080	2535	4000	2341	100	450	4080X210X200	38	40
	4400	2472	**199**	4580	2816	4500	2622	100	450	4580X210X200	44	46
2,35 (21:9)	1900	809	**81**	2080	1073	2000	909	50	450	2080X150X180	15	17
	2400	1021	**103**	2580	1285	2500	1121	50	450	2580X150X180	20	22
	2900	1234	**124**	3080	1578	3000	1384	100	450	3080X210X200	26	28
	3400	1447	**145**	3580	1791	3500	1597	100	450	3580X210X200	32	34
	3900	1660	**167**	4080	2004	4000	1810	100	450	4080X210X200	38	40
	4400	1872	**188**	4580	2216	4500	2022	100	450	4580X210X200	44	46
2,37	1900	802	**81**	2080	1066	2000	902	50	450	2080X150X180	15	17
	2400	1013	**103**	2580	1277	2500	1113	50	450	2580X150X180	20	22
	2900	1224	**124**	3080	1568	3000	1374	100	450	3080X210X200	26	28
	3400	1435	**145**	3580	1779	3500	1585	100	450	3580X210X200	32	34
	3900	1646	**167**	4080	1990	4000	1796	100	450	4080X210X200	38	40
	4400	1857	**188**	4580	2201	4500	2007	100	450	4580X210X200	44	46
2,39	1900	795	**81**	2080	1059	2000	895	50	450	2080X150X180	15	17
	2400	1004	**102**	2580	1268	2500	1104	50	450	2580X150X180	20	22
	2900	1213	**124**	3080	1557	3000	1363	100	450	3080X210X200	26	28
	3400	1423	**145**	3580	1767	3500	1573	100	450	3580X210X200	32	34
	3900	1632	**166**	4080	1976	4000	1782	100	450	4080X210X200	38	40
	4400	1841	**188**	4580	2185	4500	1991	100	450	4580X210X200	44	46
2,40	1900	792	**81**	2080	1056	2000	892	50	450	2080X150X180	15	17
	2400	1000	**102**	2580	1264	2500	1100	50	450	2580X150X180	20	22
	2900	1208	**124**	3080	1552	3000	1358	100	450	3080X210X200	26	28
	3400	1417	**145**	3580	1761	3500	1567	100	450	3580X210X200	32	34
	3900	1625	**166**	4080	1969	4000	1775	100	450	4080X210X200	38	40
	4400	1833	**188**	4580	2177	4500	1983	100	450	4580X210X200	44	46

Custom sizes are available upon request

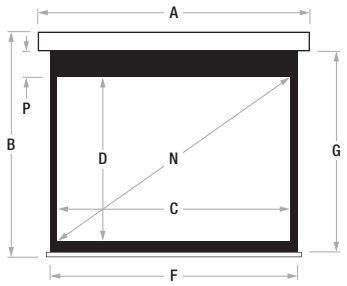

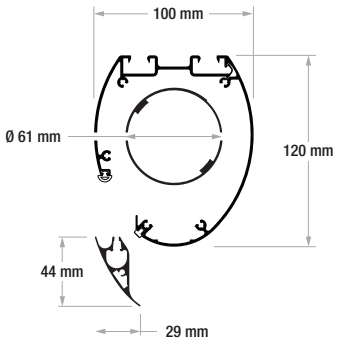

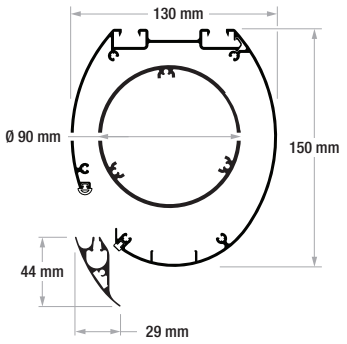

In certain circumstances, due to the surface's height, it is necessary to use a case with the rolling tube of 90 mm.

Surface Fireproof Certifications

Rugby Plus 70 mm borders

Aspect Ratio	Viewing Width	Viewing Height	Diagonal Inches	Overall Width	Overall Height	Surface Width	Surface Height	Standard Drop	Total Maximum Drop	Packaging Dimensions	Net Weight	Gross Weight
	C	D	N	A	B	F	G	P	mm	mm	kg	kg
1,00 (1:1)	1860	1860	**104**	2080	2164	2000	2000	70	70	2344X150X180	15	17
	2360	2360	**131**	2580	2694	2500	2500	100	100	2874X210X200	20	22
	2860	2860	**159**	3080	3224	3000	3030	100	100	3374X210X200	26	28
1,33 (4:3)	1860	1398	**92**	2080	1702	2000	1538	70	450	2040X150X180	15	17
	2360	1774	**116**	2580	2078	2500	1914	70	450	2540X150X180	20	22
	2860	2150	**141**	3080	2514	3000	2320	100	450	3040X210X200	26	28
	3360	2526	**166**	3580	2890	3500	2696	100	450	3540X210X200	32	34
	3860	2902	**190**	4080	3266	4000	3072	100	450	4040X210X200	38	40
	4360	3278	**215**	4580	3642	4500	3448	100	150	4540X210X200	44	46
1,6 (16:10)	1860	1163	**86**	2080	1467	2000	1303	70	450	2040X150X180	15	17
	2360	1475	**110**	2580	1779	2500	1615	70	450	2540X150X180	20	22
	2860	1788	**133**	3080	2152	3000	1958	100	450	3040X210X200	26	28
	3360	2100	**156**	3580	2464	3500	2270	100	450	3540X210X200	32	34
	3860	2413	**179**	4080	2777	4000	2583	100	450	4040X210X200	38	40
	4360	2725	**202**	4580	3089	4500	2895	100	450	4540X210X200	44	46
1,78 (16:9)	1860	1045	**84**	2080	1349	2000	1185	70	450	2040X150X180	15	17
	2360	1326	**107**	2580	1630	2500	1466	70	450	2540X150X180	20	22
	2860	1607	**129**	3080	1971	3000	1777	100	450	3040X210X200	26	28
	3360	1888	**152**	3580	2252	3500	2058	100	450	3540X210X200	32	34
	3860	2169	**174**	4080	2533	4000	2339	100	450	4040X210X200	38	40
	4360	2449	**197**	4580	2813	4500	2619	100	450	4540X210X200	44	46
2,35 (21:9)	1860	791	**80**	2080	1095	2000	931	70	450	2040X150X180	15	17
	2360	1004	**101**	2580	1308	2500	1144	70	450	2540X150X180	20	22
	2860	1217	**122**	3080	1581	3000	1387	100	450	3040X210X200	26	28
	3360	1430	**144**	3580	1794	3500	1600	100	450	3540X210X200	32	34
	3860	1643	**165**	4080	2007	4000	1813	100	450	4040X210X200	38	40
	4360	1855	**187**	4580	2219	4500	2025	100	450	4540X210X200	44	46
2,37	1860	785	**79**	2080	1089	2000	925	70	450	2040X150X180	15	17
	2360	996	**101**	2580	1300	2500	1136	70	450	2540X150X180	20	22
	2860	1207	**122**	3080	1571	3000	1377	100	450	3040X210X200	26	28
	3360	1418	**144**	3580	1782	3500	1588	100	450	3540X210X200	32	34
	3860	1629	**165**	4080	1993	4000	1799	100	450	4040X210X200	38	40
	4360	1840	**186**	4580	2204	4500	2010	100	450	4540X210X200	44	46
2,39	1860	778	**79**	2080	1082	2000	918	70	450	2040X150X180	15	17
	2360	987	**101**	2580	1291	2500	1127	70	450	2540X150X180	20	22
	2860	1197	**122**	3080	1561	3000	1367	100	450	3040X210X200	26	28
	3360	1406	**143**	3580	1770	3500	1576	100	450	3540X210X200	32	34
	3860	1615	**165**	4080	1979	4000	1785	100	450	4040X210X200	38	40
	4360	1824	**186**	4580	2188	4500	1994	100	450	4540X210X200	44	46
2,40	1860	775	**79**	2080	1079	2000	915	70	450	2040X150X180	15	17
	2360	983	**101**	2580	1287	2500	1123	70	450	2540X150X180	20	22
	2860	1192	**122**	3080	1556	3000	1362	100	450	3040X210X200	26	28
	3360	1400	**143**	3580	1764	3500	1570	100	450	3540X210X200	32	34
	3860	1608	**165**	4080	1972	4000	1778	100	450	4040X210X200	38	40
	4360	1817	**186**	4580	2181	4500	1987	100	450	4540X210X200	44	46

Custom sizes are available upon request

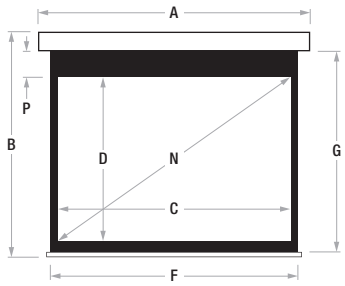

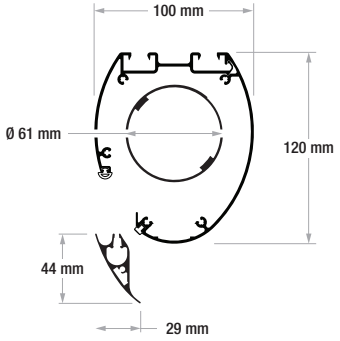

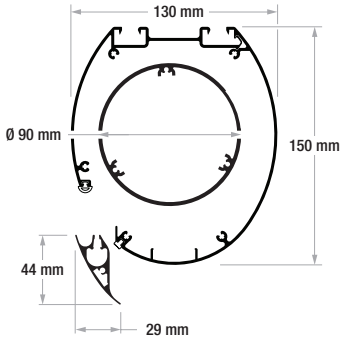

In certain circumstances, due to the surface's height, it is necessary to use a case with the rolling tube of 90 mm.

Surface Fireproof Certifications

Rugby Pro

Tensio Classic 50 mm borders / without borders

Aspect Ratio	Viewing Width	Viewing Height	Diagonal Inches	Overall Width	Overall Height	Surface Width	Surface Height	Standard Drop	Total Maximum Drop	Packaging Dimensions	Net Weight	Gross Weight
	C	D	N	A	B	F	G	P	mm	mm	kg	kg
1,00 (1:1)	1620	1620	**90**	2070	1884	1720	1720	50	50	2250X150X180	15	17
	2120	2120	**118**	2570	2464	2220	2270	100	100	2750X210X200	20	22
	2620	2620	**146**	3070	2964	2720	2770	100	100	3250X210X200	26	28
1,33 (4:3)	1620	1218	**80**	2070	1482	1720	1318	50	450	2250X150X180	15	17
	2120	1594	**104**	2570	1858	2220	1694	50	450	2750X150X180	20	22
	2620	1970	**129**	3070	2314	2720	2120	100	450	3250X210X200	26	28
	3120	2346	**154**	3570	2690	3220	2496	100	450	3750X210X200	32	34
	3620	2722	**178**	4070	3066	3720	2872	100	450	4250X210X200	38	40
	4120	3098	**203**	4570	3442	4220	3248	100	350	4750X210X200	44	46
1,78 (16:9)	1620	910	**73**	2070	1174	1720	1010	50	450	2250X150X180	15	17
	2120	1191	**96**	2570	1455	2220	1291	50	450	2750X150X180	20	22
	2620	1472	**118**	3070	1816	2720	1622	100	450	3250X210X200	26	28
	3120	1753	**141**	3570	2097	3220	1903	100	450	3750X210X200	32	34
	3620	2034	**163**	4070	2378	3720	2184	100	450	4250X210X200	38	40
	4120	2315	**186**	4570	2659	4220	2465	100	450	4750X210X200	44	46
1,6 (16:10)	1620	1013	**75**	2070	1277	1720	1113	50	450	2250X150X180	15	17
	2120	1325	**98**	2570	1589	2220	1425	50	450	2750X150X180	20	22
	2620	1638	**122**	3070	1982	2720	1788	100	450	3250X210X200	26	28
	3120	1950	**145**	3570	2294	3220	2100	100	450	3750X210X200	32	34
	3620	2263	**168**	4070	2607	3720	2413	100	450	4250X210X200	38	40
	4120	2575	**191**	4570	2919	4220	2725	100	450	4750X210X200	44	46
2,35 (21:9)	1620	689	**69**	2070	953	1720	789	50	450	2250X150X180	15	17
	2120	902	**91**	2570	1166	2220	1002	50	450	2750X150X180	20	22
	2620	1115	**112**	3070	1459	2720	1265	100	450	3250X210X200	26	28
	3120	1328	**133**	3570	1672	3220	1478	100	450	3750X210X200	32	34
	3620	1540	**155**	4070	1884	3720	1690	100	450	4250X210X200	38	40
	4120	1753	**176**	4570	2097	4220	1903	100	450	4750X210X200	44	46
2,37	1620	684	**69**	2070	948	1720	784	50	450	2250X150X180	15	17
	2120	895	**91**	2570	1159	2220	995	50	450	2750X150X180	20	22
	2620	1105	**112**	3070	1449	2720	1255	100	450	3250X210X200	26	28
	3120	1316	**133**	3570	1660	3220	1466	100	450	3750X210X200	32	34
	3620	1527	**155**	4070	1871	3720	1677	100	450	4250X210X200	38	40
	4120	1738	**176**	4570	2082	4220	1888	100	450	4750X210X200	44	46
2,40	1620	675	**69**	2070	939	1720	775	50	450	2250X150X180	15	17
	2120	883	**90**	2570	1147	2220	983	50	450	2750X150X180	20	22
	2620	1092	**112**	3070	1436	2720	1242	100	450	3250X210X200	26	28
	3120	1300	**133**	3570	1644	3220	1450	100	450	3750X210X200	32	34
	3620	1508	**154**	4070	1852	3720	1658	100	450	4250X210X200	38	40
	4120	1717	**176**	4570	2061	4220	1867	100	450	4750X210X200	44	46

Custom sizes are available upon request

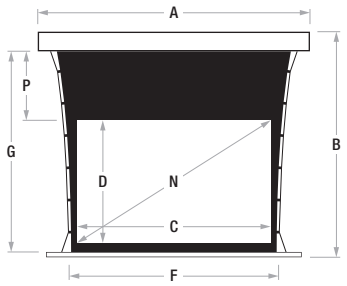

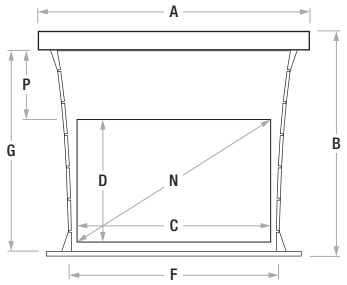

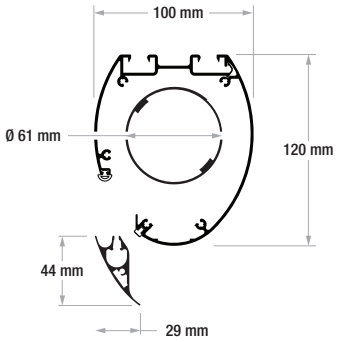

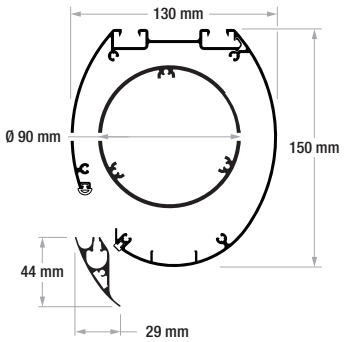

In certain circumstances, due to the surface's height, it is necessary to use a case with the rolling tube of 90 mm.

REACH COMPLIANCE · CE · RoHS COMPLIANT · M1 M2 Surface Fireproof Certifications

Rugby Pro

Tensio Classic 70 mm borders

Aspect Ratio	Viewing Width	Viewing Height	Diagonal Inches	Overall Width	Overall Height	Surface Width	Surface Height	Standard Drop	Total Maximum Drop	Packaging Dimensions	Net Weight	Gross Weight
	C	D	N	A	B	F	G	P	mm	mm	kg	kg
1,00 (1:1)	1580	1580	**88**	2070	1884	1680	1720	70	70	2250X150X180	15	17
	2080	2080	**116**	2570	2444	2180	2250	100	100	2750X210X200	20	22
	2580	2580	**144**	3070	2944	2680	2750	100	100	3250X210X200	26	28
1,33 (4:3)	1580	1188	**78**	2070	1492	1680	1328	70	450	2250X150X180	15	17
	2080	1564	**102**	2570	1868	2180	1704	70	450	2750X150X180	20	22
	2580	1940	**127**	3070	2304	2680	2110	100	450	3250X210X200	26	28
	3080	2316	**152**	3570	2680	3180	2486	100	450	3750X210X200	32	34
	3580	2692	**176**	4070	3056	3680	2862	100	450	4250X210X200	38	40
	4080	3068	**201**	4570	3432	4180	3238	100	350	4750X210X200	44	46
1,78 (16:9)	1580	888	**71**	2070	1192	1680	1028	70	450	2250X150X180	15	17
	2080	1169	**94**	2570	1473	2180	1309	70	450	2750X150X180	20	22
	2580	1449	**117**	3070	1813	2680	1619	100	450	3250X210X200	26	28
	3080	1730	**139**	3570	2094	3180	1900	100	450	3750X210X200	32	34
	3580	2011	**162**	4070	3026	3680	2872	100	450	4250X210X200	38	40
	4080	2292	**184**	4570	3402	4180	3248	100	450	4750X210X200	44	46
1,6 (16:10)	1580	988	**73**	2070	1292	1680	1128	70	450	2250X150X180	15	17
	2080	1300	**97**	2570	1604	2180	1440	70	450	2750X150X180	20	22
	2580	1613	**120**	3070	1977	2680	1783	100	450	3250X210X200	26	28
	3080	1925	**143**	3570	2289	3180	2095	100	450	3750X210X200	32	34
	3580	2238	**166**	4070	3026	3680	2872	100	450	4250X210X200	38	40
	4080	2550	**189**	4570	3402	4180	3248	100	450	4750X210X200	44	46
2,35 (21:9)	1580	672	**68**	2070	976	1680	812	70	450	2250X150X180	15	17
	2080	885	**89**	2570	1189	2180	1025	70	450	2750X150X180	20	22
	2580	1098	**110**	3070	1462	2680	1268	100	450	3250X210X200	26	28
	3080	1311	**132**	3570	1675	3180	1481	100	450	3750X210X200	32	34
	3580	1523	**153**	4070	3026	3680	2872	100	450	4250X210X200	38	40
	4080	1736	**175**	4570	3402	4180	3248	100	450	4750X210X200	44	46
2,37	1580	667	**68**	2070	971	1680	807	70	450	2250X150X180	15	17
	2080	878	**89**	2570	1182	2180	1018	70	450	2750X150X180	20	22
	2580	1089	**110**	3070	1453	2680	1259	100	450	3250X210X200	26	28
	3080	1300	**132**	3570	1664	3180	1470	100	450	3750X210X200	32	34
	3580	1511	**153**	4070	3026	3680	2872	100	450	4250X210X200	38	40
	4080	1722	**174**	4570	3402	4180	3248	100	450	4750X210X200	44	46
2,40	1580	658	**67**	2070	962	1680	798	70	450	2250X150X180	15	17
	2080	867	**89**	2570	1171	2180	1007	70	450	2750X150X180	20	22
	2580	1075	**110**	3070	1439	2680	1245	100	450	3250X210X200	26	28
	3080	1283	**131**	3570	1647	3180	1453	100	450	3750X210X200	32	34
	3580	1492	**153**	4070	3026	3680	2872	100	450	4250X210X200	38	40
	4080	1700	**174**	4570	3402	4180	3248	100	450	4750X210X200	44	46

Custom sizes are available upon request

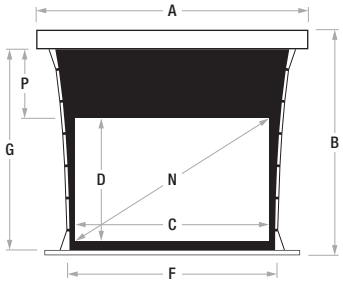

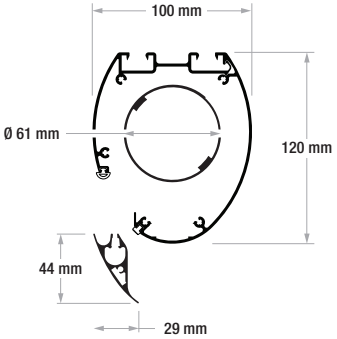

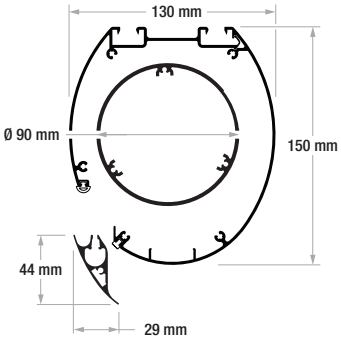

In certain circumstances, due to the surface's height, it is necessary to use a case with the rolling tube of 90 mm.

Surface Fireproof Certifications

Rugby Pro 50 mm borders

Aspect Ratio	Viewing Width	Viewing Height	Diagonal Inches	Overall Width	Overall Height	Surface Width	Surface Height	Standard Drop	Total Maximum Drop	Packaging Dimensions	Net Weight	Gross Weight
	C	D	N	A	B	F	G	P	mm	mm	kg	kg
1,00 (1:1)	1900	1900	**106**	2070	2164	2000	2000	50	50	2344X150X180	15	17
	2400	2400	**134**	2570	2694	2500	2500	100	100	2874X210X200	20	22
	2900	2900	**161**	3070	3244	3000	3050	100	100	3374X210X200	26	28
1,33 (4:3)	1900	1429	**94**	2070	1693	2000	1529	50	450	2080X150X180	15	17
	2400	1805	**118**	2570	2069	2500	1905	50	450	2580X150X180	20	22
	2900	2180	**143**	3070	2524	3000	2330	100	450	3080X210X200	26	28
	3400	2556	**167**	3570	2900	3500	2706	100	400	3580X210X200	32	34
	3900	2932	**192**	4070	3276	4000	3082	100	450	4080X210X200	38	40
	4400	3308	**217**	4570	3652	4500	3458	100	150	4580X210X200	44	46
1,6 (16:10)	1900	1188	**88**	2070	1452	2000	1288	50	450	2080X150X180	15	17
	2400	1500	**111**	2570	1764	2500	1600	50	450	2580X150X180	20	22
	2900	1813	**135**	3070	2157	3000	1963	100	450	3080X210X200	26	28
	3400	2125	**158**	3570	2469	3500	2275	100	450	3580X210X200	32	34
	3900	2438	**181**	4070	2782	4000	2588	100	450	4080X210X200	38	40
	4400	2750	**204**	4570	3094	4500	2900	100	450	4580X210X200	44	46
1,78 (16:9)	1900	1067	**86**	2070	1331	2000	1167	50	450	2080X150X180	15	17
	2400	1348	**108**	2570	1612	2500	1448	50	450	2580X150X180	20	22
	2900	1629	**131**	3070	1973	3000	1779	100	450	3080X210X200	26	28
	3400	1910	**154**	3570	2254	3500	2060	100	450	3580X210X200	32	34
	3900	2191	**176**	4070	2535	4000	2341	100	450	4080X210X200	38	40
	4400	2472	**199**	4570	2816	4500	2622	100	450	4580X210X200	44	46
2,35 (21:9)	1900	809	**81**	2070	1073	2000	909	50	450	2080X150X180	15	17
	2400	1021	**103**	2570	1285	2500	1121	50	450	2580X150X180	20	22
	2900	1234	**124**	3070	1578	3000	1384	100	450	3080X210X200	26	28
	3400	1447	**145**	3570	1791	3500	1597	100	450	3580X210X200	32	34
	3900	1660	**167**	4070	2004	4000	1810	100	450	4080X210X200	38	40
	4400	1872	**188**	4570	2216	4500	2022	100	450	4580X210X200	44	46
2,37	1900	802	**81**	2070	1066	2000	902	50	450	2080X150X180	15	17
	2400	1013	**103**	2570	1277	2500	1113	50	450	2580X150X180	20	22
	2900	1224	**124**	3070	1568	3000	1374	100	450	3080X210X200	26	28
	3400	1435	**145**	3570	1779	3500	1585	100	450	3580X210X200	32	34
	3900	1646	**167**	4070	1990	4000	1796	100	450	4080X210X200	38	40
	4400	1857	**188**	4570	2201	4500	2007	100	450	4580X210X200	44	46
2,39	1900	795	**81**	2070	1059	2000	895	50	450	2080X150X180	15	17
	2400	1004	**102**	2570	1268	2500	1104	50	450	2580X150X180	20	22
	2900	1213	**124**	3070	1557	3000	1363	100	450	3080X210X200	26	28
	3400	1423	**145**	3570	1767	3500	1573	100	450	3580X210X200	32	34
	3900	1632	**166**	4070	1976	4000	1782	100	450	4080X210X200	38	40
	4400	1841	**188**	4570	2185	4500	1991	100	450	4580X210X200	44	46
2,40	1900	792	**81**	2070	1056	2000	892	50	450	2080X150X180	15	17
	2400	1000	**102**	2570	1264	2500	1100	50	450	2580X150X180	20	22
	2900	1208	**124**	3070	1552	3000	1358	100	450	3080X210X200	26	28
	3400	1417	**145**	3570	1761	3500	1567	100	450	3580X210X200	32	34
	3900	1625	**166**	4070	1969	4000	1775	100	450	4080X210X200	38	40
	4400	1833	**188**	4570	2177	4500	1983	100	450	4580X210X200	44	46

Custom sizes are available upon request

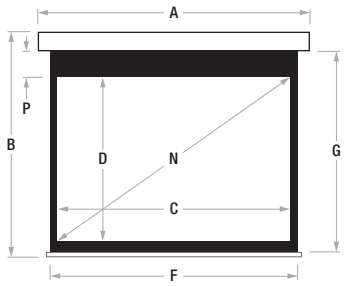

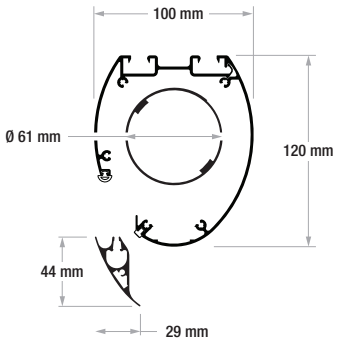

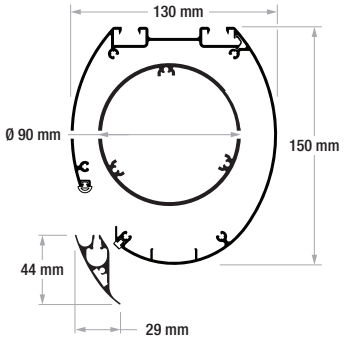

In certain circumstances, due to the surface's height, it is necessary to use a case with the rolling tube of 90 mm.

Surface Fireproof Certifications

Rugby Pro 70 mm borders

Aspect Ratio	Viewing Width	Viewing Height	Diagonal Inches	Overall Width	Overall Height	Surface Width	Surface Height	Standard Drop	Total Maximum Drop	Packaging Dimensions	Net Weight	Gross Weight
	C	D	N	A	B	F	G	P	mm	mm	kg	kg
1,00 (1:1)	1860	1860	**104**	2070	2164	2000	2000	70	70	2344X150X180	15	17
	2360	2360	**131**	2570	2694	2500	2500	100	100	2874X210X200	20	22
	2860	2860	**159**	3070	3224	3000	3030	100	100	3374X210X200	26	28
1,33 (4:3)	1860	1398	**92**	2070	1702	2000	1538	70	450	2040X150X180	15	17
	2360	1774	**116**	2570	2078	2500	1914	70	450	2540X150X180	20	22
	2860	2150	**141**	3070	2514	3000	2320	100	450	3040X210X200	26	28
	3360	2526	**166**	3570	2890	3500	2696	100	400	3540X210X200	32	34
	3860	2902	**190**	4070	3266	4000	3072	100	450	4040X210X200	38	40
	4360	3278	**215**	4570	3642	4500	3448	100	150	4540X210X200	44	46
1,6 (16:10)	1860	1163	**86**	2070	1467	2000	1303	70	450	2040X150X180	15	17
	2360	1475	**110**	2570	1779	2500	1615	70	450	2540X150X180	20	22
	2860	1788	**133**	3070	2152	3000	1958	100	450	3040X210X200	26	28
	3360	2100	**156**	3570	2464	3500	2270	100	450	3540X210X200	32	34
	3860	2413	**179**	4070	2777	4000	2583	100	450	4040X210X200	38	40
	4360	2725	**202**	4570	3089	4500	2895	100	450	4540X210X200	44	46
1,78 (16:9)	1860	1045	**84**	2070	1349	2000	1185	70	450	2040X150X180	15	17
	2360	1326	**107**	2570	1630	2500	1466	70	450	2540X150X180	20	22
	2860	1607	**129**	3070	1971	3000	1777	100	450	3040X210X200	26	28
	3360	1888	**152**	3570	2252	3500	2058	100	450	3540X210X200	32	34
	3860	2169	**174**	4070	2533	4000	2339	100	450	4040X210X200	38	40
	4360	2449	**197**	4570	2813	4500	2619	100	450	4540X210X200	44	46
2,35 (21:9)	1860	791	**80**	2070	1095	2000	931	70	450	2040X150X180	15	17
	2360	1004	**101**	2570	1308	2500	1144	70	450	2540X150X180	20	22
	2860	1217	**122**	3070	1581	3000	1387	100	450	3040X210X200	26	28
	3360	1430	**144**	3570	1794	3500	1600	100	450	3540X210X200	32	34
	3860	1643	**165**	4070	2007	4000	1813	100	450	4040X210X200	38	40
	4360	1855	**187**	4570	2219	4500	2025	100	450	4540X210X200	44	46
2,37	1860	785	**79**	2070	1089	2000	925	70	450	2040X150X180	15	17
	2360	996	**101**	2570	1300	2500	1136	70	450	2540X150X180	20	22
	2860	1207	**122**	3070	1571	3000	1377	100	450	3040X210X200	26	28
	3360	1418	**144**	3570	1782	3500	1588	100	450	3540X210X200	32	34
	3860	1629	**165**	4070	1993	4000	1799	100	450	4040X210X200	38	40
	4360	1840	**186**	4570	2204	4500	2010	100	450	4540X210X200	44	46
2,39	1860	778	**79**	2070	1082	2000	918	70	450	2040X150X180	15	17
	2360	987	**101**	2570	1291	2500	1127	70	450	2540X150X180	20	22
	2860	1197	**122**	3070	1561	3000	1367	100	450	3040X210X200	26	28
	3360	1406	**143**	3570	1770	3500	1576	100	450	3540X210X200	32	34
	3860	1615	**165**	4070	1979	4000	1785	100	450	4040X210X200	38	40
	4360	1824	**186**	4570	2188	4500	1994	100	450	4540X210X200	44	46
2,40	1860	775	**79**	2070	1079	2000	915	70	450	2040X150X180	15	17
	2360	983	**101**	2570	1287	2500	1123	70	450	2540X150X180	20	22
	2860	1192	**122**	3070	1556	3000	1362	100	450	3040X210X200	26	28
	3360	1400	**143**	3570	1764	3500	1570	100	450	3540X210X200	32	34
	3860	1608	**165**	4070	1972	4000	1778	100	450	4040X210X200	38	40
	4360	1817	**186**	4570	2181	4500	1987	100	450	4540X210X200	44	46

Custom sizes are available upon request

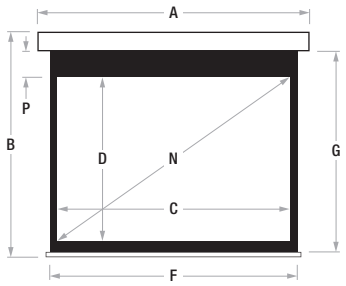

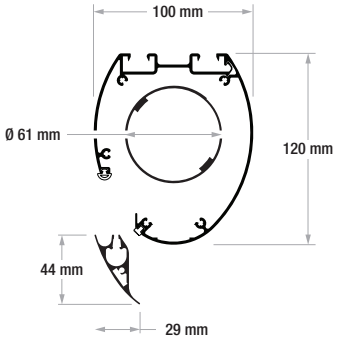

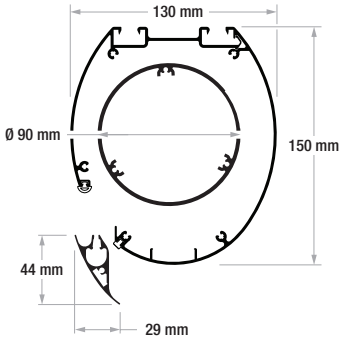

In certain circumstances, due to the surface's height, it is necessary to use a case with the rolling tube of 90 mm.

Surface Fireproof Certifications

Rugby Pro Without borders

Aspect Ratio	Viewing Width	Viewing Height	Diagonal Inches	Overall Width	Overall Height	Packaging Dimensions	Net Weight	Gross Weight
	C	D	N	A	B	mm	kg	kg
1,00 (1:1)	2000	2000	**111**	2070	2164	2250X150X180	15	17
	2500	2500	**139**	2570	2694	2750X210X200	20	22
	3000	3000	**167**	3070	3194	3250X210X200	26	28
1,33 (4:3)	2000	1504	**99**	2070	1668	2250X150X180	15	17
	2500	1880	**123**	2570	2044	2750X150X180	20	22
	3000	2256	**148**	3070	2450	3250X210X200	26	28
	3500	2632	**172**	3570	2826	3750X210X200	32	34
	4000	3008	**197**	4070	3202	4250X210X200	38	40
	4500	3383	**222**	4570	3577	4750X210X200	44	46
1,6 (16:10)	2000	1250	**93**	2070	1414	2250X150X180	15	17
	2500	1563	**116**	2570	1727	2750X150X180	20	22
	3000	1875	**139**	3070	2069	3250X210X200	26	28
	3500	2188	**162**	3570	2382	3750X210X200	32	34
	4000	2500	**186**	4070	2694	4250X210X200	38	40
	4500	2813	**209**	4570	3007	4750X210X200	44	46
1,78 (16:9)	2000	1124	**90**	2070	1288	2250X150X180	15	17
	2500	1404	**113**	2570	1568	2750X150X180	20	22
	3000	1685	**135**	3070	1879	3250X210X200	26	28
	3500	1966	**158**	3570	2160	3750X210X200	32	34
	4000	2247	**181**	4070	2441	4250X210X200	38	40
	4500	2528	**203**	4570	2722	4750X210X200	44	46
2,35 (21:9)	2000	851	**86**	2070	1015	2250X150X180	15	17
	2500	1064	**107**	2570	1228	2750X150X180	20	22
	3000	1277	**128**	3070	1471	3250X210X200	26	28
	3500	1489	**150**	3570	1683	3750X210X200	32	34
	4000	1702	**171**	4070	1896	4250X210X200	38	40
	4500	1915	**193**	4570	2109	4750X210X200	44	46
2,37	2000	844	**85**	2070	1008	2250X150X180	15	17
	2500	1055	**107**	2570	1219	2750X150X180	20	22
	3000	1266	**128**	3070	1460	3250X210X200	26	28
	3500	1477	**150**	3570	1671	3750X210X200	32	34
	4000	1688	**171**	4070	1882	4250X210X200	38	40
	4500	1899	**192**	4570	2093	4750X210X200	44	46
2,39	2000	837	**85**	2070	1001	2250X150X180	15	17
	2500	1046	**107**	2570	1210	2750X150X180	20	22
	3000	1255	**128**	3070	1449	3250X210X200	26	28
	3500	1464	**149**	3570	1658	3750X210X200	32	34
	4000	1674	**171**	4070	1868	4250X210X200	38	40
	4500	1883	**192**	4570	2077	4750X210X200	44	46
2,40	2000	833	**85**	2070	997	2250X150X180	15	17
	2500	1042	**107**	2570	1206	2750X150X180	20	22
	3000	1250	**128**	3070	1444	3250X210X200	26	28
	3500	1458	**149**	3570	1652	3750X210X200	32	34
	4000	1667	**171**	4070	1861	4250X210X200	38	40
	4500	1875	**192**	4570	2069	4750X210X200	44	46

Custom sizes are available upon request

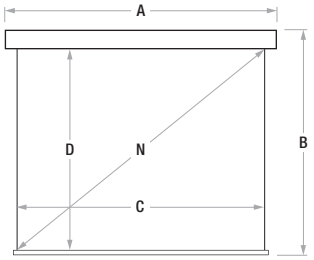

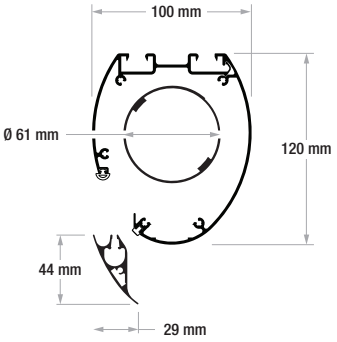

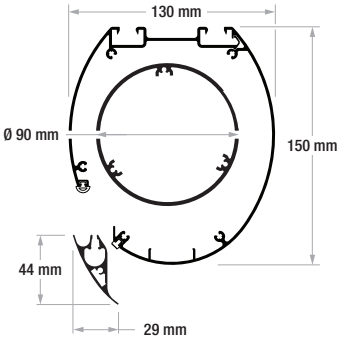

In certain circumstances, due to the surface's height, it is necessary to use a case with the rolling tube of 90 mm.

REACH COMPLIANCE CE RoHS COMPLIANT M1 M2 Surface Fireproof Certifications

Inceel

Tensio Classic 50 mm borders / without borders

Aspect Ratio	Viewing Width	Viewing Height	Diagonal Inches	Overall Width	Overall Height	Surface Width	Surface Height	Standard Drop	Total Maximum Drop	Packaging Dimensions	Net Weight	Gross Weight
	C	D	N	A	B	F	G	P	mm	mm	kg	kg
1,00 (1:1)	1850	1850	**103**	2370	2101	1950	1950	50	50	2383x200x210	18	23
	2150	2150	**120**	2670	2451	2250	2300	100	100	2683x200x210	19	24
	2650	2650	**148**	3170	2951	2750	2800	100	100	3183x200x210	21	26
1,33 (4:3)	1850	1391	**91**	2370	1642	1950	1491	50	450	2383x200x210	18	23
	2150	1617	**106**	2670	1918	2250	1767	100	450	2683x200x210	19	24
	2650	1992	**131**	3170	2293	2750	2142	100	450	3183x200x210	21	26
	3150	2368	**155**	3670	2669	3250	2518	100	450	3683x200x210	23	30
1,60 (16:10)	1850	1156	**86**	2370	1407	1950	1256	50	450	2383x200x210	17	22
	2150	1344	**100**	2670	1595	2250	1444	50	450	2683x200x210	18	23
	2650	1656	**123**	3170	1907	2750	1756	50	450	3183x200x210	20	25
	3150	1969	**146**	3670	2270	3250	2119	100	450	3683x200x210	22	27
	3650	2281	**169**	4170	2582	3750	2431	100	300	4183x200x210	24	29
1,78 (16:9)	1850	1039	**84**	2370	1290	1950	1139	50	450	2383x200x210	17	22
	2150	1208	**97**	2670	1459	2250	1308	50	450	2683x200x210	18	23
	2650	1489	**120**	3170	1740	2750	1589	50	450	3183x200x210	20	25
	3150	1770	**142**	3670	2071	3250	1920	100	450	3683x200x210	22	27
	3650	2051	**165**	4170	2352	3750	2201	100	450	4183x200x210	24	29
2,35 (21:9)	1850	787	**79**	2370	1038	1950	887	50	450	2383x200x210	17	22
	2150	915	**92**	2670	1166	2250	1015	50	450	2683x200x210	18	23
	2650	1128	**113**	3170	1379	2750	1228	50	450	3183x200x210	20	25
	3150	1340	**135**	3670	1641	3250	1490	100	450	3683x200x210	22	27
	3650	1553	**156**	4170	1854	3750	1703	100	450	4183x200x210	24	29
2,37	1850	781	**79**	2370	1032	1950	881	50	450	2383x200x210	17	22
	2150	907	**92**	2670	1158	2250	1007	50	450	2683x200x210	18	23
	2650	1118	**113**	3170	1369	2750	1218	50	450	3183x200x210	20	25
	3150	1329	**135**	3670	1630	3250	1479	100	450	3683x200x210	22	27
	3650	1540	**156**	4170	1841	3750	1690	100	450	4183x200x210	24	29
2,40	1850	771	**79**	2370	1022	1950	871	50	450	2383x200x210	17	22
	2150	896	**92**	2670	1147	2250	996	50	450	2683x200x210	18	23
	2650	1104	**113**	3170	1355	2750	1204	50	450	3183x200x210	20	25
	3150	1313	**134**	3670	1614	3250	1463	100	450	3683x200x210	22	27
	3650	1521	**156**	4170	1822	3750	1671	100	450	4183x200x210	24	29

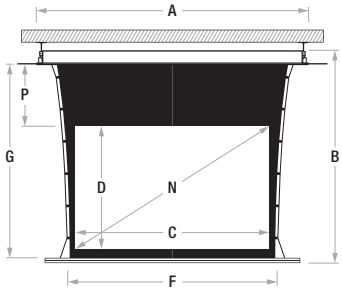

Custom sizes are available upon request

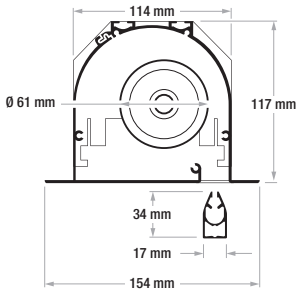

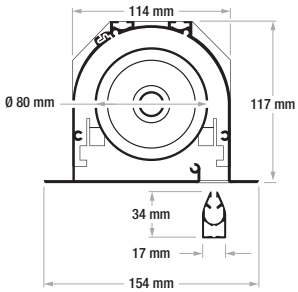

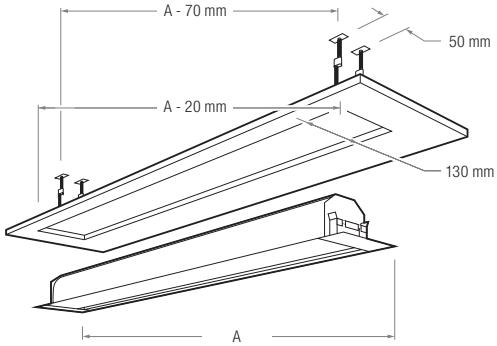

Surface Fireproof Certifications

Inceel

Tensio Classic 70 mm borders

Aspect Ratio	Viewing Width	Viewing Height	Diagonal Inches	Overall Width	Overall Height	Surface Width	Surface Height	Standard Drop	Total Maximum Drop	Packaging Dimensions	Net Weight	Gross Weight
	C	D	N	A	B	F	G	P	mm	mm	kg	kg
1,00 (1:1)	1810	1810	**101**	2370	2101	1950	1950	70	70	2383x200x210	18	23
	2110	2110	**117**	2670	2431	2250	2280	100	100	2683x200x210	19	24
	2610	2610	**145**	3170	2931	2750	2780	100	100	3183x200x210	21	26
1,33 (4:3)	1810	1361	**89**	2370	1652	1950	1501	70	450	2383x200x210	18	23
	2110	1586	**104**	2670	1907	2250	1756	100	450	2683x200x210	19	24
	2610	1962	**129**	3170	2283	2750	2132	100	450	3183x200x210	21	26
	3110	2338	**153**	3670	2659	3250	2508	100	450	3683x200x210	23	30
1,60 (16:10)	1810	1131	**84**	2370	1422	1950	1271	70	450	2383x200x210	17	22
	2110	1319	**98**	2670	1610	2250	1459	70	450	2683x200x210	18	23
	2610	1631	**121**	3170	1922	2750	1771	70	450	3183x200x210	20	25
	3110	1944	**144**	3670	2265	3250	2114	100	450	3683x200x210	22	27
	3610	2256	**168**	4170	2577	3750	2426	100	300	4183x200x210	24	29
1,78 (16:9)	1810	1017	**82**	2370	1308	1950	1157	70	450	2383x200x210	17	22
	2110	1185	**95**	2670	1476	2250	1325	70	450	2683x200x210	18	23
	2610	1466	**118**	3170	1757	2750	1606	70	450	3183x200x210	20	25
	3110	1747	**140**	3670	2068	3250	1917	100	450	3683x200x210	22	27
	3610	2028	**163**	4170	2349	3750	2198	100	450	4183x200x210	24	29
2,35 (21:9)	1810	770	**77**	2370	1061	1950	910	70	450	2383x200x210	17	22
	2110	898	**90**	2670	1189	2250	1038	70	450	2683x200x210	18	23
	2610	1111	**112**	3170	1402	2750	1251	70	450	3183x200x210	20	25
	3110	1323	**133**	3670	1644	3250	1493	100	450	3683x200x210	22	27
	3610	1536	**154**	4170	1857	3750	1706	100	450	4183x200x210	24	29
2,37	1810	764	**77**	2370	1055	1950	904	70	450	2383x200x210	17	22
	2110	890	**90**	2670	1181	2250	1030	70	450	2683x200x210	18	23
	2610	1101	**112**	3170	1392	2750	1241	70	450	3183x200x210	20	25
	3110	1312	**133**	3670	1633	3250	1482	100	450	3683x200x210	22	27
	3610	1523	**154**	4170	1844	3750	1693	100	450	4183x200x210	24	29
2,40	1810	754	**77**	2370	1045	1950	894	70	450	2383x200x210	17	22
	2110	879	**90**	2670	1170	2250	1019	70	450	2683x200x210	18	23
	2610	1088	**111**	3170	1379	2750	1228	70	450	3183x200x210	20	25
	3110	1296	**133**	3670	1617	3250	1466	100	450	3683x200x210	22	27
	3610	1504	**154**	4170	1825	3750	1674	100	450	4183x200x210	24	29

Custom sizes are available upon request

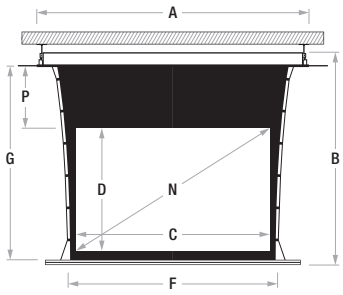

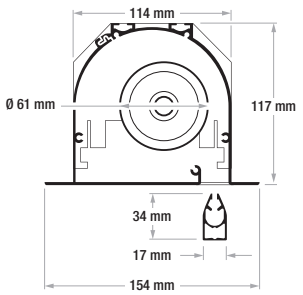

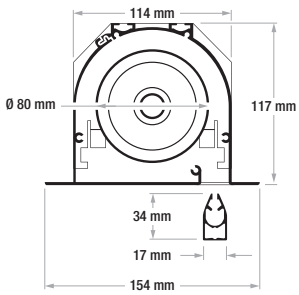

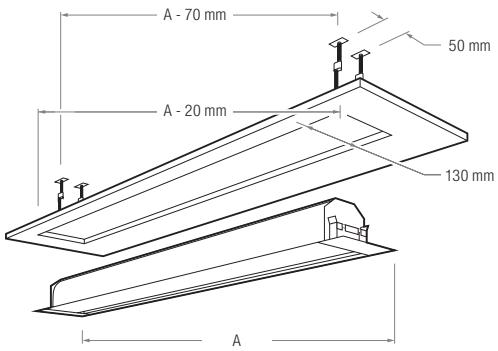

In certain circumstances, due to the surface's height, it is necessary to use a case with the rolling tube of 80 mm.

Surface Fireproof Certifications

Inceel 50 mm borders

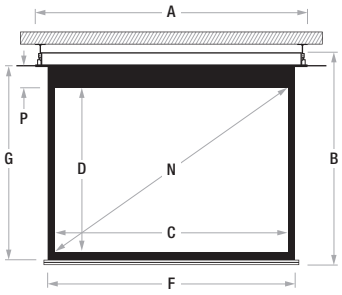

Aspect Ratio	Viewing Width	Viewing Height	Diagonal Inches	Overall Width	Overall Height	Surface Width	Surface Height	Standard Drop	Total Maximum Drop	Packaging Dimensions	Net Weight	Gross Weight
	C	D	N	A	B	F	G	P	mm	mm	kg	kg
1,00 (1:1)	1900	1900	**106**	2170	2151	2000	2000	50	50	2183x200x210	17	22
	2100	2100	**117**	2370	2351	2200	2200	50	50	2383x200x210	18	23
	2400	2400	**134**	2670	2651	2500	2550	50	50	2683x200x210	19	24
	2900	2900	**161**	3170	3201	3000	3050	100	100	3183x200x210	21	26
1,33 (4:3)	1900	1429	**94**	2170	1680	2000	1529	50	450	2183x200x210	17	22
	2100	1579	**103**	2370	1830	2200	1679	50	450	2383x200x210	18	23
	2400	1805	**118**	2670	2056	2500	1905	50	350	2683x200x210	19	24
	2900	2180	**143**	3170	2481	3000	2330	100	450	3183x200x210	21	26
	3400	2556	**167**	3670	2857	3500	2706	100	400	3683x200x210	23	30
1,6 (16:10)	1900	1188	**88**	2170	1439	2000	1288	50	450	2183x200x210	16	21
	2100	1313	**97**	2370	1564	2200	1413	50	450	2383x200x210	17	22
	2400	1500	**111**	2670	1751	2500	1600	50	450	2683x200x210	18	23
	2900	1813	**135**	3170	2064	3000	1913	50	450	3183x200x210	20	25
	3400	2125	**158**	3670	2426	3500	2275	100	400	3683x200x210	22	27
	3900	2438	**181**	4170	2739	4000	2588	100	400	4183x200x210	24	29
1,78 (16:9)	1900	1067	**86**	2170	1318	2000	1167	50	450	2183x200x210	16	21
	2100	1180	**95**	2370	1431	2200	1280	50	450	2383x200x210	17	22
	2400	1348	**108**	2670	1599	2500	1448	50	450	2683x200x210	18	23
	2900	1629	**131**	3170	1880	3000	1729	50	450	3183x200x210	20	25
	3400	1910	**154**	3670	2211	3500	2060	100	450	3683x200x210	22	27
	3900	2191	**176**	4170	2492	4000	2341	100	450	4183x200x210	24	29
2,35 (21:9)	1900	809	**81**	2170	1060	2000	909	50	450	2183x200x210	16	21
	2100	894	**90**	2370	1145	2200	994	50	450	2383x200x210	17	22
	2400	1021	**103**	2670	1272	2500	1121	50	450	2683x200x210	18	23
	2900	1234	**124**	3170	1485	3000	1334	50	450	3183x200x210	20	25
	3400	1447	**145**	3670	1748	3500	1597	100	450	3683x200x210	22	27
	3900	1660	**167**	4170	1961	4000	1810	100	450	4183x200x210	24	29
2,37	1900	802	**81**	2170	1053	2000	902	50	450	2183x200x210	16	21
	2100	886	**90**	2370	1137	2200	986	50	450	2383x200x210	17	22
	2400	1013	**103**	2670	1264	2500	1113	50	450	2683x200x210	18	23
	2900	1224	**124**	3170	1475	3000	1324	50	450	3183x200x210	20	25
	3400	1435	**145**	3670	1736	3500	1585	100	450	3683x200x210	22	27
	3900	1646	**167**	4170	1947	4000	1796	100	450	4183x200x210	24	29
2,40	1900	792	**81**	2170	1043	2000	892	50	450	2183x200x210	16	21
	2100	875	**90**	2370	1126	2200	975	50	450	2383x200x210	17	22
	2400	1000	**102**	2670	1251	2500	1100	50	450	2683x200x210	18	23
	2900	1208	**124**	3170	1459	3000	1308	50	450	3183x200x210	20	25
	3400	1417	**145**	3670	1718	3500	1567	100	450	3683x200x210	22	27
	3900	1625	**166**	4170	1926	4000	1775	100	450	4183x200x210	24	29

Custom sizes are available upon request

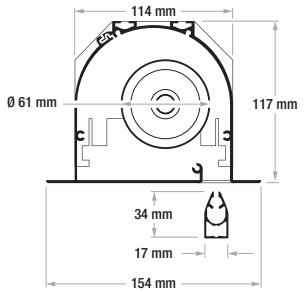

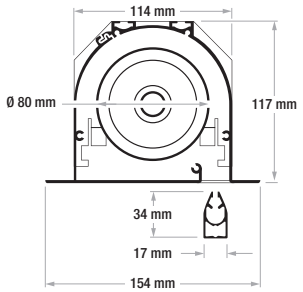

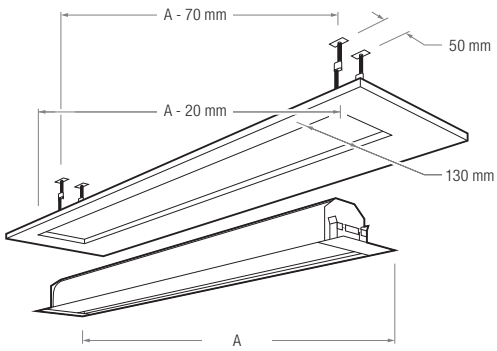

In certain circumstances, due to the surface's height, it is necessary to use a case with the rolling tube of 80 mm.

Surface Fireproof Certifications

Inceel 70 mm borders

Aspect Ratio	Viewing Width	Viewing Height	Diagonal Inches	Overall Width	Overall Height	Surface Width	Surface Height	Standard Drop	Total Maximum Drop	Packaging Dimensions	Net Weight	Gross Weight
	C	D	N	A	B	F	G	P	mm	mm	kg	kg
1,00 (1:1)	1860	1860	**104**	2170	2151	1960	2000	70	70	2183x200x210	17	22
	2060	2060	**115**	2370	2351	2160	2200	70	70	2383x200x210	18	23
	2360	2360	**131**	2670	2651	2460	2530	70	70	2683x200x210	19	24
	2860	2860	**159**	3170	3181	2960	3030	100	100	3183x200x210	21	26
1,33 (4:3)	1860	1398	**92**	2170	1689	1960	1538	70	450	2183x200x210	17	22
	2060	1549	**101**	2370	1840	2160	1689	70	450	2383x200x210	18	23
	2360	1774	**116**	2670	2065	2460	1914	70	350	2683x200x210	19	24
	2860	2150	**141**	3170	2471	2960	2320	100	450	3183x200x210	21	26
	3360	2526	**166**	3670	2847	3460	2696	100	400	3683x200x210	23	30
1,60 (16:10)	1860	1163	**86**	2170	1454	1960	1303	70	450	2183x200x210	16	21
	2060	1288	**96**	2370	1579	2160	1428	70	450	2383x200x210	17	22
	2360	1475	**110**	2670	1766	2460	1615	70	450	2683x200x210	18	23
	2860	1788	**133**	3170	2079	2960	1928	70	450	3183x200x210	20	25
	3360	2100	**156**	3670	2421	3460	2270	100	400	3683x200x210	22	27
	3860	2413	**179**	4170	2734	3960	2583	100	400	4183x200x210	24	29
1,78 (16:9)	1860	1045	**84**	2170	1336	1960	1185	70	450	2183x200x210	16	21
	2060	1157	**93**	2370	1448	2160	1297	70	450	2383x200x210	17	22
	2360	1326	**107**	2670	1617	2460	1466	70	450	2683x200x210	18	23
	2860	1607	**129**	3170	1898	2960	1747	70	450	3183x200x210	20	25
	3360	1888	**152**	3670	2209	3460	2058	100	450	3683x200x210	22	27
	3860	2169	**174**	4170	2490	3960	2339	100	450	4183x200x210	24	29
2,35 (21:9)	1860	791	**80**	2170	1082	1960	931	70	450	2183x200x210	16	21
	2060	877	**88**	2370	1168	2160	1017	70	450	2383x200x210	17	22
	2360	1004	**101**	2670	1295	2460	1144	70	450	2683x200x210	18	23
	2860	1217	**122**	3170	1508	2960	1357	70	450	3183x200x210	20	25
	3360	1430	**144**	3670	1751	3460	1600	100	450	3683x200x210	22	27
	3860	1643	**165**	4170	1964	3960	1813	100	450	4183x200x210	24	29
2,37	1860	785	**79**	2170	1076	1960	925	70	450	2183x200x210	16	21
	2060	869	**88**	2370	1160	2160	1009	70	450	2383x200x210	17	22
	2360	996	**101**	2670	1287	2460	1136	70	450	2683x200x210	18	23
	2860	1207	**122**	3170	1498	2960	1347	70	450	3183x200x210	20	25
	3360	1418	**144**	3670	1739	3460	1588	100	450	3683x200x210	22	27
	3860	1629	**165**	4170	1950	3960	1799	100	450	4183x200x210	24	29
2,40	1860	775	**79**	2170	1066	1960	915	70	450	2183x200x210	16	21
	2060	858	**88**	2370	1149	2160	998	70	450	2383x200x210	17	22
	2360	983	**101**	2670	1274	2460	1123	70	450	2683x200x210	18	23
	2860	1192	**122**	3170	1483	2960	1332	70	450	3183x200x210	20	25
	3360	1400	**143**	3670	1721	3460	1570	100	450	3683x200x210	22	27
	3860	1608	**165**	4170	1929	3960	1778	100	450	4183x200x210	24	29

Custom sizes are available upon request

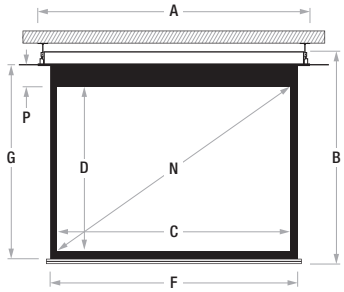

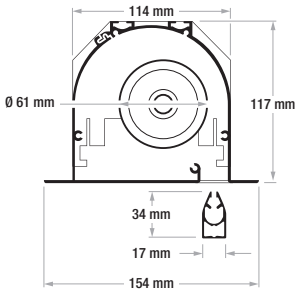

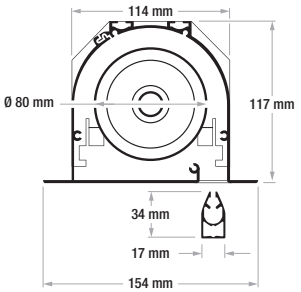

In certain circumstances, due to the surface's height, it is necessary to use a case with the rolling tube of 80 mm.

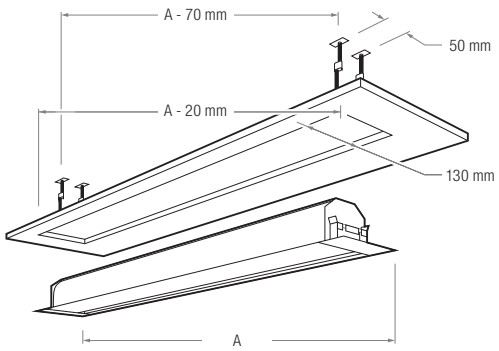

Surface Fireproof Certifications

Inceel Without borders

Aspect Ratio	Viewing Width	Viewing Height	Diagonal Inches	Overall Width	Overall Height	Packaging Dimensions	Net Weight	Gross Weight
	C	D	N	A	B	mm	kg	kg
1,00 (1:1)	1800	1800	**100**	1970	1951	1983x200x210	16	21
	2000	2000	**111**	2170	2151	2183x200x210	17	22
	2200	2200	**122**	2370	2351	2383x200x210	18	23
	2500	2500	**139**	2670	2651	2683x200x210	19	24
	3000	3000	**167**	3170	3151	3183x200x210	21	26
1,33 (4:3)	2000	1504	**99**	2170	1655	2183x200x210	17	22
	2200	1654	**108**	2370	1805	2383x200x210	18	23
	2500	1880	**123**	2670	2031	2683x200x210	19	24
	3000	2256	**148**	3170	2407	3183x200x210	21	26
	3500	2632	**172**	3670	2783	3683x200x210	23	30
	4000	3008	**197**	4170	3159	4183x200x210	24	31
1,60 (16:10)	2000	1250	**93**	2170	1401	2183x200x210	16	21
	2200	1375	**102**	2370	1526	2383x200x210	17	22
	2500	1563	**116**	2670	1714	2683x200x210	18	23
	3000	1875	**139**	3170	2026	3183x200x210	20	25
	3500	2188	**162**	3670	2339	3683x200x210	22	27
	4000	2500	**186**	4170	2651	4183x200x210	24	29
1,78 (16:9)	2000	1124	**90**	2170	1275	2183x200x210	16	21
	2200	1236	**99**	2370	1387	2383x200x210	17	22
	2500	1404	**113**	2670	1555	2683x200x210	18	23
	3000	1685	**135**	3170	1836	3183x200x210	20	25
	3500	1966	**158**	3670	2117	3683x200x210	22	27
	4000	2247	**181**	4170	2398	4183x200x210	24	29
2,35 (21:9)	2000	851	**86**	2170	1002	2183x200x210	16	21
	2200	936	**94**	2370	1087	2383x200x210	17	22
	2500	1064	**107**	2670	1215	2683x200x210	18	23
	3000	1277	**128**	3170	1428	3183x200x210	20	25
	3500	1489	**150**	3670	1640	3683x200x210	22	27
	4000	1702	**171**	4170	1853	4183x200x210	24	29
2,37	2000	844	**85**	2170	995	2183x200x210	16	21
	2200	928	**94**	2370	1079	2383x200x210	17	22
	2500	1055	**107**	2670	1206	2683x200x210	18	23
	3000	1266	**128**	3170	1417	3183x200x210	20	25
	3500	1477	**150**	3670	1628	3683x200x210	22	27
	4000	1688	**171**	4170	1839	4183x200x210	24	29
2,40	2000	833	**85**	2170	984	2183x200x210	16	21
	2200	917	**94**	2370	1068	2383x200x210	17	22
	2500	1042	**107**	2670	1193	2683x200x210	18	23
	3000	1250	**128**	3170	1401	3183x200x210	20	25
	3500	1458	**149**	3670	1609	3683x200x210	22	27
	4000	1667	**171**	4170	1818	4183x200x210	24	29

Custom sizes are available upon request

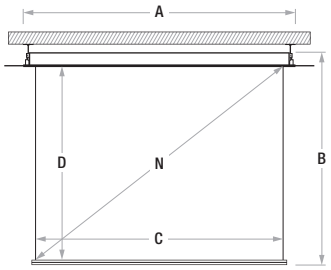

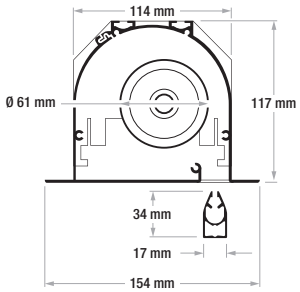

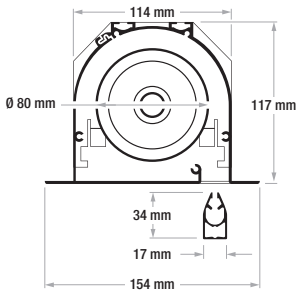

In certain circumstances, due to the surface's height, it is necessary to use a case with the rolling tube of 80 mm.

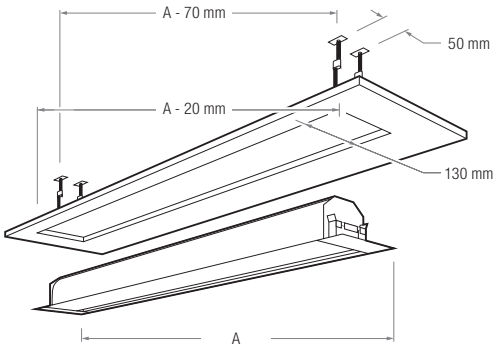

Surface Fireproof Certifications

Max Inceel MFTS

Max Floating Tensio System with 50 mm borders / without borders

Aspect Ratio	Viewing Width	Viewing Height	Diagonal Inches	Overall Width	Overall Height	Surface Width	Surface Height	Standard Drop	Extra Maximum Drop	Packaging Dimensions	Net Weight	Gross Weight
	C	D	N	A	B	F	G	P	mm	mm	kg	kg
1,33 (4:3)	4680	3519	**231**	5200	3954	4780	3669	100	200	5380X320X290	76	101
	5180	3895	**255**	5700	4330	5280	4045	100	200	5880X320X290	84	109
	5680	4271	**280**	6200	4706	5780	4421	100	200	6380X320X290	92	117
1,6 (16:10)	4680	2925	**217**	5200	3360	4780	3075	100	200	5380X320X290	74	99
	5180	3238	**240**	5700	3673	5280	3388	100	200	5880X320X290	82	107
	5680	3550	**264**	6200	3985	5780	3700	100	200	6380X320X290	90	115
1,78 (16:9)	4680	2629	**211**	5200	3064	4780	2779	100	200	5380X320X290	74	99
	5180	2910	**234**	5700	3345	5280	3060	100	200	5880X320X290	82	107
	5680	3191	**256**	6200	3626	5780	3341	100	200	6380X320X290	90	115
2,35 (21:9)	4680	1991	**200**	5200	2426	4780	2141	100	200	5380X320X290	73	98
	5180	2204	**222**	5700	2639	5280	2354	100	200	5880X320X290	81	106
	5680	2417	**243**	6200	2852	5780	2567	100	200	6380X320X290	89	114
2,37	4680	1975	**200**	5200	2410	4780	2125	100	200	5380X320X290	73	98
	5180	2186	**221**	5700	2621	5280	2336	100	200	5880X320X290	81	106
	5680	2397	**243**	6200	2832	5780	2547	100	200	6380X320X290	89	114
2,39	4680	1958	**200**	5200	2393	4780	2108	100	200	5380X320X290	73	98
	5180	2167	**221**	5700	2602	5280	2317	100	200	5880X320X290	81	106
	5680	2377	**242**	6200	2812	5780	2527	100	200	6380X320X290	89	114
2,40	4680	1950	**200**	5200	2385	4780	2100	100	200	5380X320X290	73	98
	5180	2158	**221**	5700	2593	5280	2308	100	200	5880X320X290	81	106
	5680	2367	**242**	6200	2802	5780	2517	100	200	6380X320X290	89	114

Custom sizes are available upon request

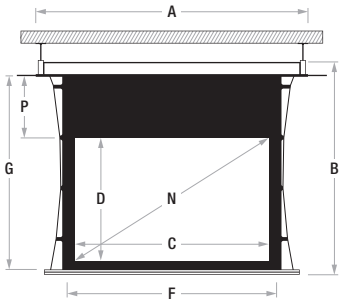

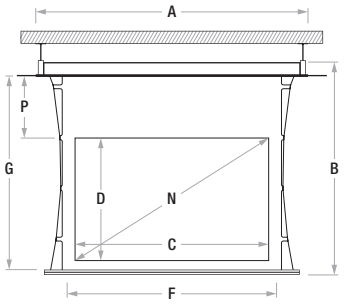

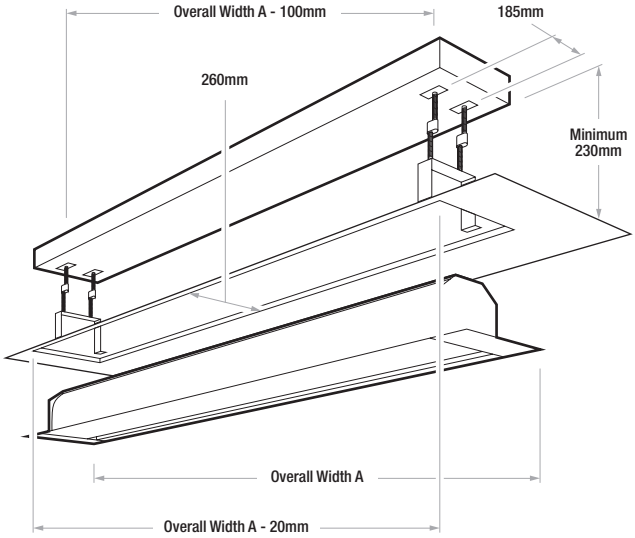

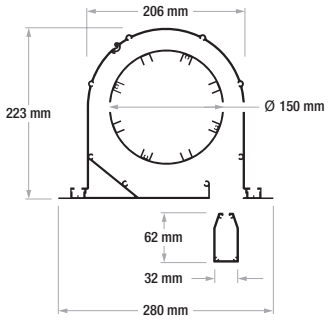

REACH COMPLIANCE CE RoHS COMPLIANT M2 Surface Fireproof Certifications

Max Inceel Without borders

Aspect Ratio	Viewing Width	Viewing Height	Diagonal Inches	Overall Width	Overall Height	Packaging Dimensions	Net Weight	Gross Weight
	C	D	N	A	B	mm	kg	kg
1,00 (1:1)	5000	5000	**278**	5200	5257	5380X320X290	80	105
1,33 (4:3)	5000	3759	**246**	5200	4016	5380X320X290	76	101
	5500	4135	**271**	5700	4392	5880X320X290	84	109
	6000	4511	**296**	6200	4768	6380X320X290	92	117
	6500	4887	**320**	6700	5144	6880X320X290	103	123
1,6 (16:10)	5000	3125	**232**	5200	3382	5380X320X290	74	99
	5500	3438	**255**	5700	3695	5880X320X290	82	107
	6000	3750	**279**	6200	4007	6380X320X290	90	115
	6500	4063	**302**	6700	4320	6880X320X290	101	126
1,78 (16:9)	5000	2809	**226**	5200	3066	5380X320X290	74	99
	5500	3090	**248**	5700	3347	5880X320X290	82	107
	6000	3371	**271**	6200	3628	6380X320X290	90	115
	6500	3652	**294**	6700	3909	6880X320X290	101	126
2,35 (21:9)	5000	2128	**214**	5200	2385	5380X320X290	73	98
	5500	2340	**235**	5700	2597	5880X320X290	81	106
	6000	2553	**257**	6200	2810	6380X320X290	89	114
	6500	2766	**278**	6700	3023	6880X320X290	100	125
2,37	5000	2110	**214**	5200	2367	5380X320X290	73	98
	5500	2321	**235**	5700	2578	5880X320X290	81	106
	6000	2532	**256**	6200	2789	6380X320X290	89	114
	6500	2743	**278**	6700	3000	6880X320X290	100	125
2,39	5000	2092	**213**	5200	2349	5380X320X290	73	98
	5500	2301	**235**	5700	2558	5880X320X290	81	106
	6000	2510	**256**	6200	2767	6380X320X290	89	114
	6500	2720	**277**	6700	2977	6880X320X290	100	125
2,40	5000	2083	**213**	5200	2340	5380X320X290	73	98
	5500	2292	**235**	5700	2549	5880X320X290	81	106
	6000	2500	**256**	6200	2757	6380X320X290	89	114
	6500	2708	**277**	6700	2965	6880X320X290	100	125

Custom sizes are available upon request

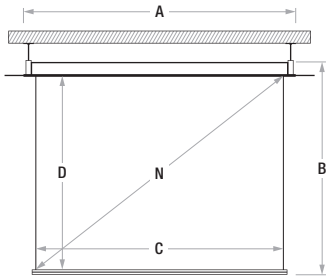

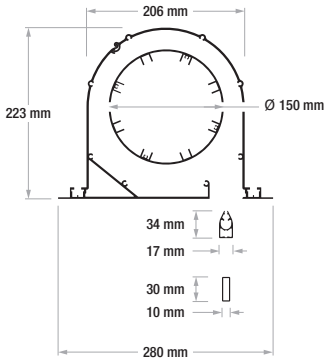

30 mm lower bar is used on screens with viewing width of 6500 mm

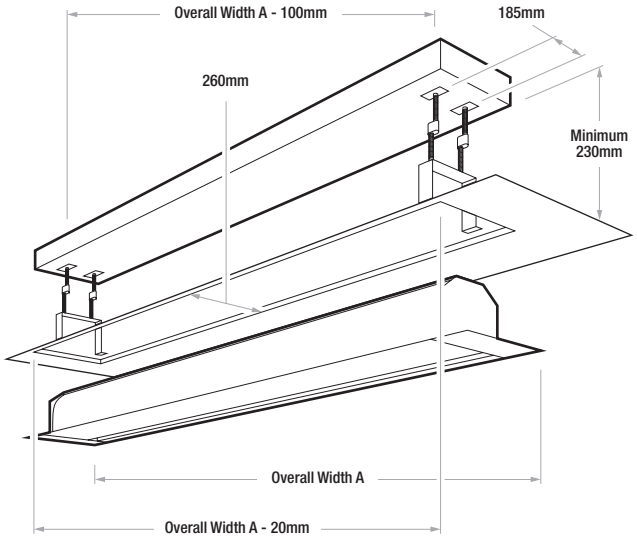

Surface Fireproof Certifications

InSuperior FTS

Floating Tensio System 50 mm borders

Aspect Ratio	Viewing Width	Viewing Height	Diagonal Inches	Surface Width	Surface Height	Standard Drop	Total Maximum Drop	Packaging Dimensions	Net Weight	Gross Weight
	C	D	N	F	G	P	mm	mm	kg	kg
1,33 (4:3)	2000	1504	**99**	2100	1604	50	1400	2540x340x460	61	71
	2500	1880	**123**	2600	1980	50	1400	3100x340x460	71	81
	3000	2256	**148**	3100	2356	50	1400	3669x340x460	79	90
	3500	2632	**172**	3600	2782	100	1400	4216x340x460	87	99
	4000	3008	**197**	4100	3158	100	1200	4808x340x460	93	106
	4500	3383	**222**	4600	3533	100	500	5400x340x460	110	123
1,60 (16:10)	2000	1250	**93**	2100	1350	50	1400	2511x340x460	61	71
	2500	1563	**116**	2600	1663	50	1400	3049x340x460	71	81
	3000	1875	**139**	3100	1975	50	1400	3599x340x460	79	90
	3500	2188	**162**	3600	2338	100	1400	4133x340x460	87	99
	4000	2500	**186**	4100	2650	100	1200	4699x340x460	93	106
	4500	2813	**209**	4600	2963	100	1200	5264x340x460	110	123
1,78 (16:9)	2000	1124	**90**	2100	1224	50	1400	2495x340x460	61	71
	2500	1404	**113**	2600	1504	50	1400	3026x340x460	71	81
	3000	1685	**135**	3100	1785	50	1400	3567x340x460	79	90
	3500	1966	**158**	3600	2116	100	1400	4096x340x460	87	99
	4000	2247	**181**	4100	2397	100	1400	4651x340x460	93	106
	4500	2528	**203**	4600	2678	100	1400	5205x340x460	110	123
2,35 (21:9)	2000	851	**86**	2100	951	50	1400	2465x340x460	61	71
	2500	1064	**107**	2600	1164	50	1400	2984x340x460	71	81
	3000	1277	**128**	3100	1377	50	1400	3509x340x460	79	90
	3500	1489	**150**	3600	1639	100	1400	4027x340x460	87	99
	4000	1702	**171**	4100	1852	100	1400	4563x340x460	93	106
	4500	1915	**193**	4600	2065	100	1400	5095x340x460	110	123
2,37	2000	844	**85**	2100	944	50	1400	2375x340x460	61	71
	2500	1055	**107**	2600	1155	50	1400	2893x340x460	71	81
	3000	1266	**128**	3100	1366	50	1400	3418x340x460	79	90
	3500	1477	**150**	3600	1577	100	1400	3936x340x460	87	99
	4000	1688	**171**	4100	1838	100	1400	4471x340x460	93	106
	4500	1899	**192**	4600	2049	100	1400	5002x340x460	110	123
2,40	2000	833	**85**	2100	933	50	1400	2374x340x460	61	71
	2500	1042	**107**	2600	1142	50	1400	2891x340x460	71	81
	3000	1250	**128**	3100	1350	50	1400	3413x340x460	79	90
	3500	1458	**149**	3600	1558	100	1400	3933x340x460	87	99
	4000	1667	**171**	4100	1817	100	1400	4468x340x460	93	106
	4500	1875	**192**	4600	2025	100	1400	4999x340x460	110	123

Custom sizes are available upon request

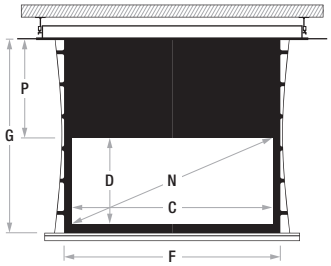

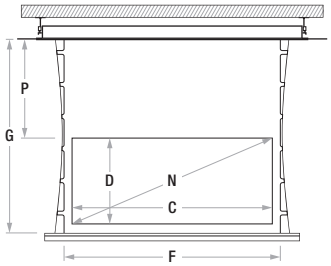

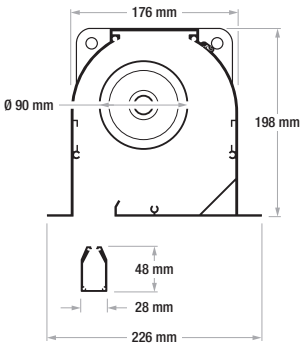

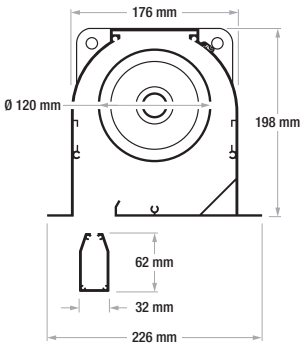

In certain circumstances, due to the surface's height, it is necessary to use a case with the rolling tube of 120 mm.

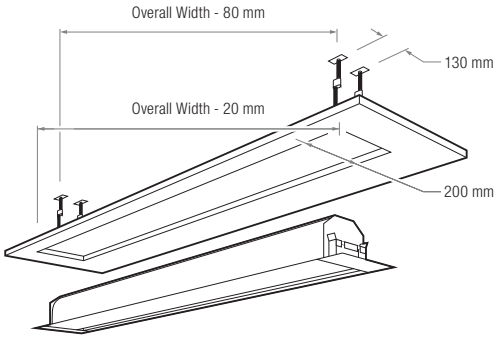

Surface Fireproof Certifications

OnSuperior FTS

Floating Tensio System 50 mm borders

Aspect Ratio	Viewing Width	Viewing Height	Diagonal Inches	Surface Width	Surface Height	Standard Drop	Total Maximum Drop	Packaging Dimensions	Net Weight	Gross Weight
	C	D	N	F	G	P	mm	mm	kg	kg
1,33 (4:3)	2000	1504	**99**	2100	1604	50	1400	2422x340x460	61	71
	2500	1880	**123**	2600	1980	50	1400	2982x340x460	71	81
	3000	2256	**148**	3100	2356	50	1400	3563x340x460	79	90
	3500	2632	**172**	3600	2782	100	1350	4109x340x460	87	99
	4000	3008	**197**	4100	3158	100	1200	4700x340x460	93	106
1,60 (16:10)	2000	1250	**93**	2100	1350	50	1400	2392x340x460	61	71
	2500	1563	**116**	2600	1663	50	1400	2931x340x460	71	81
	3000	1875	**139**	3100	1975	50	1400	3490x340x460	79	90
	3500	2188	**162**	3600	2338	100	1350	4024x340x460	87	99
	4000	2500	**186**	4100	2650	100	1350	4589x340x460	93	106
1,78 (16:9)	2000	1124	**90**	2100	1224	50	1400	2376x340x460	61	71
	2500	1404	**113**	2600	1504	50	1400	2908x340x460	71	81
	3000	1685	**135**	3100	1785	50	1400	3458x340x460	79	90
	3500	1966	**158**	3600	2166	100	1350	3986x340x460	87	99
	4000	2247	**181**	4100	2397	100	1350	4500x340x460	93	106
	4500	2528	**203**	4600	2678	100	1350	5095x340x460	110	123
2,35 (21:9)	2000	851	**86**	2100	951	50	1400	2346x340x460	61	71
	2500	1064	**107**	2600	1164	50	1400	2866x340x460	71	81
	3000	1277	**128**	3100	1377	50	1400	3398x340x460	79	90
	3500	1489	**150**	3600	1639	100	1350	3915x340x460	87	99
	4000	1702	**171**	4100	1852	100	1350	4450x340x460	93	106
	4500	1915	**193**	4600	2065	100	1350	4983x340x460	110	123
2,37	2000	844	**85**	2100	944	50	1400	2345x340x460	61	71
	2500	1055	**107**	2600	1155	50	1400	2865x340x460	71	81
	3000	1266	**128**	3100	1366	50	1400	3396x340x460	79	90
	3500	1477	**150**	3600	1627	100	1350	3914x340x460	87	99
	4000	1688	**171**	4100	1838	100	1350	4448x340x460	93	106
	4500	1899	**192**	4600	2049	100	1350	4980x340x460	110	123
2,4	2000	833	**85**	2100	933	50	1400	2345x340x460	61	71
	2500	1042	**107**	2600	1142	50	1400	2865x340x460	71	81
	3000	1250	**128**	3100	1350	50	1400	3396x340x460	79	90
	3500	1458	**149**	3600	1608	100	1350	3911x340x460	87	99
	4000	1667	**171**	4100	1817	100	1350	4444x340x460	93	106
	4500	1875	**192**	4600	2025	100	1350	4976x340x460	110	123

Custom sizes are available upon request

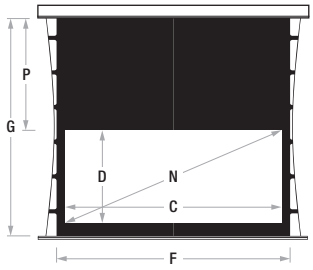

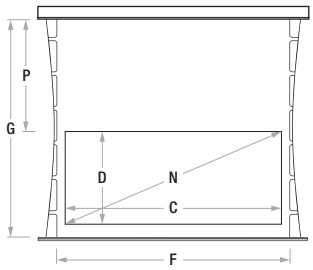

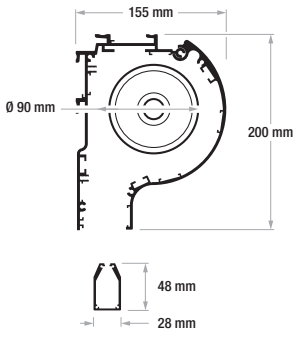

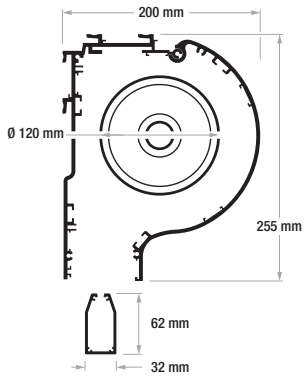

In certain circumstances, due to the surface's height, it is necessary to use a case with the rolling tube of 120 mm.

Surface Fireproof Certifications

Multiformat

Tensio Classic 70 mm borders

Aspect Ratio	Viewing Width	Viewing Height	Diagonal Inches	2° Aspect Ratio	Viewing Height	Diagonal Inches	3° Aspect Ratio	Viewing Height	Diagonal Inches	4° Aspect Ratio	Viewing Height	Diagonal Inches	5° Aspect Ratio	Viewing Height	Diagonal Inches	Overall Width	Overall Height	Surface Width	Surface Height	Standard Drop	Total Maximum Drop	Packaging Dimensions	Net Weight	Gross Weight
	C	D	N		D	N		D	N		D	N		D	N	A	B	F	G	P	mm	mm	kg	kg
1,33 (4:3)	1790	1346	**88**	1,60	1119	**83**	1,78	1006	**81**	1,85	968	**80**	2,35	762	**77**	2250	1740	1930	1486	70	400	2263x300x330	34	39
	2040	1534	**100**	1,60	1275	**95**	1,78	1146	**92**	1,85	1103	**91**	2,35	868	**87**	2500	1928	2180	1674	70	400	2513x300x330	40	45
	2290	1722	**113**	1,60	1431	**106**	1,78	1287	**103**	1,85	1238	**102**	2,35	974	**98**	2750	2116	2430	1862	70	400	2763x300x330	47	52
	2540	1910	**125**	1,60	1588	**118**	1,78	1427	**115**	1,85	1373	**114**	2,35	1081	**109**	3000	2304	2680	2050	70	400	3013x300x330	55	60
	2790	2098	**137**	1,60	1744	**130**	1,78	1567	**126**	1,85	1508	**125**	2,35	1187	**119**	3250	2492	2930	2238	70	400	3263x300x330	58	63
1,60	1790	1119	**83**	1,78	1006	**81**	1,85	968	**80**	2,35	762	**77**	2,40	746	**76**	2250	1513	1930	1259	70	400	2263x300x330	34	39
	2040	1275	**95**	1,78	1146	**92**	1,85	1103	**91**	2,35	868	**87**	2,40	850	**87**	2500	1669	2180	1415	70	400	2513x300x330	40	45
	2290	1431	**106**	1,78	1287	**103**	1,85	1238	**102**	2,35	974	**98**	2,40	954	**98**	2750	1825	2430	1571	70	400	2763x300x330	47	52
	2540	1588	**118**	1,78	1427	**115**	1,85	1373	**114**	2,35	1081	**109**	2,40	1058	**108**	3000	1982	2680	1728	70	400	3013x300x330	55	60
	2790	1744	**130**	1,78	1567	**126**	1,85	1508	**125**	2,35	1187	**119**	2,40	1163	**119**	3250	2138	2930	1884	70	400	3263x300x330	58	63
1,78 (16:9)	1790	1006	**81**	1,85	968	**80**	2,35	762	**77**	2,40	746	**76**	-	-	-	2250	1400	1930	1146	70	400	2263x300x330	34	39
	2040	1146	**92**	1,85	1103	**91**	2,35	868	**87**	2,40	850	**87**	-	-	-	2500	1540	2180	1286	70	400	2513x300x330	40	45
	2290	1287	**103**	1,85	1238	**102**	2,35	974	**98**	2,40	954	**98**	-	-	-	2750	1681	2430	1427	70	400	2763x300x330	47	52
	2540	1427	**115**	1,85	1373	**114**	2,35	1081	**109**	2,40	1058	**108**	-	-	-	3000	1821	2680	1567	70	400	3013x300x330	55	60
	2790	1567	**126**	1,85	1508	**125**	2,35	1187	**119**	2,40	1163	**119**	-	-	-	3250	1961	2930	1707	70	400	3263x300x330	58	63
1,85	1790	968	**80**	2,35	762	**77**	2,40	746	**76**	-	-	-	-	-	-	2250	1362	1930	1108	70	400	2263x300x330	34	39
	2040	1103	**91**	2,35	868	**87**	2,40	850	**87**	-	-	-	-	-	-	2500	1497	2180	1243	70	400	2513x300x330	40	45
	2290	1238	**102**	2,35	974	**98**	2,40	954	**98**	-	-	-	-	-	-	2750	1632	2430	1378	70	400	2763x300x330	47	52
	2540	1373	**114**	2,35	1081	**109**	2,40	1058	**108**	-	-	-	-	-	-	3000	1767	2680	1513	70	400	3013x300x330	55	60
	2790	1508	**125**	2,35	1187	**119**	2,40	1163	**119**	-	-	-	-	-	-	3250	1902	2930	1648	70	400	3263x300x330	58	63
2,35 (21:9)	1790	755	**76**	2,40	746	**76**	-	-	-	-	-	-	-	-	-	2250	1149	1930	895	70	400	2263x300x330	34	39
	2040	861	**87**	2,40	850	**87**	-	-	-	-	-	-	-	-	-	2500	1255	2180	1001	70	400	2513x300x330	40	45
	2290	966	**98**	2,40	954	**98**	-	-	-	-	-	-	-	-	-	2750	1360	2430	1106	70	400	2763x300x330	47	52
	2540	1072	**109**	2,40	1058	**108**	-	-	-	-	-	-	-	-	-	3000	1466	2680	1212	70	400	3013x300x330	55	60
	2790	1177	**119**	2,40	1163	**119**	-	-	-	-	-	-	-	-	-	3250	1571	2930	1317	70	400	3263x300x330	58	63

Custom sizes are available upon request

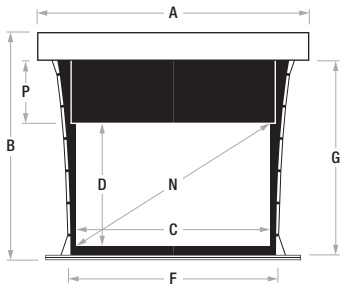

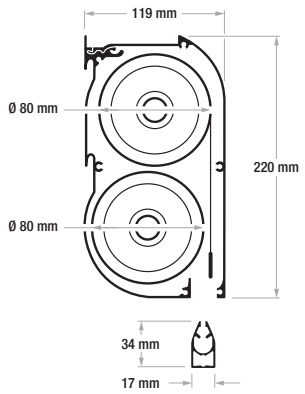

Surface Fireproof Certifications

Multiformat 70 mm borders

Aspect Ratio	Viewing Width	Viewing Height	Diagonal Inches	2° Aspect Ratio	Viewing Height	Diagonal Inches	3° Aspect Ratio	Viewing Height	Diagonal Inches	4° Aspect Ratio	Viewing Height	Diagonal Inches	5° Aspect Ratio	Viewing Height	Diagonal Inches	Overall Width	Overall Height	Surface Width	Surface Height	Standard Drop	Total Maximum Drop	Packaging Dimensions	Net Weight	Gross Weight
	C	D	N		D	N		D	N		D	N		D	N	A	B	F	G	P	mm	mm	kg	kg
1,33 (4:3)	2040	1534	**100**	1,60	1275	**95**	1,78	1146	**92**	1,85	1103	**91**	2,35	868	**87**	2250	1928	2180	1674	70	400	2263x300x330	34	39
	2290	1722	**113**	1,60	1431	**106**	1,78	1287	**103**	1,85	1238	**102**	2,35	974	**98**	2500	2116	2430	1862	70	400	2513x300x330	40	45
	2540	1910	**125**	1,60	1588	**118**	1,78	1427	**115**	1,85	1373	**114**	2,35	1081	**109**	2750	2304	2680	2050	70	400	2763x300x330	47	52
	2790	2098	**137**	1,60	1744	**130**	1,78	1567	**126**	1,85	1508	**125**	2,35	1187	**119**	3000	2492	2930	2238	70	400	3013x300x330	55	60
	3040	2286	**150**	1,60	1900	**141**	1,78	1708	**137**	1,85	1643	**136**	2,35	1294	**130**	3250	2680	3180	2426	70	400	3263x300x330	58	63
1,60	2040	1275	**95**	1,78	1146	**92**	1,85	1103	**91**	2,35	868	**87**	2,40	850	**87**	2250	1669	2180	1415	70	400	2263x300x330	34	39
	2290	1431	**106**	1,78	1287	**103**	1,85	1238	**102**	2,35	974	**98**	2,40	954	**98**	2500	1825	2430	1571	70	400	2513x300x330	40	45
	2540	1588	**118**	1,78	1427	**115**	1,85	1373	**114**	2,35	1081	**109**	2,40	1058	**108**	2750	1982	2680	1728	70	400	2763x300x330	47	52
	2790	1744	**130**	1,78	1567	**126**	1,85	1508	**125**	2,35	1187	**119**	2,40	1163	**119**	3000	2138	2930	1884	70	400	3013x300x330	55	60
	3040	1900	**141**	1,78	1708	**137**	1,85	1643	**136**	2,35	1294	**130**	2,40	1267	**130**	3250	2294	3180	2040	70	400	3263x300x330	58	63
1,78 (16:9)	2040	1146	**92**	1,85	1103	**91**	2,35	868	**87**	2,40	850	**87**	-	-	**-**	2250	1540	2180	1286	70	400	2263x300x330	34	39
	2290	1287	**103**	1,85	1238	**102**	2,35	974	**98**	2,40	954	**98**	-	-	**-**	2500	1681	2430	1427	70	400	2513x300x330	40	45
	2540	1427	**115**	1,85	1373	**114**	2,35	1081	**109**	2,40	1058	**108**	-	-	**-**	2750	1821	2680	1567	70	400	2763x300x330	47	52
	2790	1567	**126**	1,85	1508	**125**	2,35	1187	**119**	2,40	1163	**119**	-	-	**-**	3000	1961	2930	1707	70	400	3013x300x330	55	60
	3040	1708	**137**	1,85	1643	**136**	2,35	1294	**130**	2,40	1267	**130**	-	-	**-**	3250	2102	3180	1848	70	400	3263x300x330	58	63
1,85	2040	1103	**91**	2,35	868	**87**	2,40	850	**87**	-	-	**-**	-	-	**-**	2250	1497	2180	1243	70	400	2263x300x330	34	39
	2290	1238	**102**	2,35	974	**98**	2,40	954	**98**	-	-	**-**	-	-	**-**	2500	1632	2430	1378	70	400	2513x300x330	40	45
	2540	1373	**114**	2,35	1081	**109**	2,40	1058	**108**	-	-	**-**	-	-	**-**	2750	1767	2680	1513	70	400	2763x300x330	47	52
	2790	1508	**125**	2,35	1187	**119**	2,40	1163	**119**	-	-	**-**	-	-	**-**	3000	1902	2930	1648	70	400	3013x300x330	55	60
	3040	1643	**136**	2,35	1294	**130**	2,40	1267	**130**	-	-	**-**	-	-	**-**	3250	2037	3180	1783	70	400	3263x300x330	58	63
2,35 (21:9)	2040	861	**87**	2,40	850	**87**	-	-	**-**	-	-	**-**	-	-	**-**	2250	1255	2180	1001	70	400	2263x300x330	34	39
	2290	966	**98**	2,40	954	**98**	-	-	**-**	-	-	**-**	-	-	**-**	2500	1360	2430	1106	70	400	2513x300x330	40	45
	2540	1072	**109**	2,40	1058	**108**	-	-	**-**	-	-	**-**	-	-	**-**	2750	1466	2680	1212	70	400	2763x300x330	47	52
	2790	1177	**119**	2,40	1163	**119**	-	-	**-**	-	-	**-**	-	-	**-**	3000	1571	2930	1317	70	400	3013x300x330	55	60
	3040	1283	**130**	2,40	1267	**130**	-	-	**-**	-	-	**-**	-	-	**-**	3250	1677	3180	1423	70	400	3263x300x330	58	63

Custom sizes are available upon request

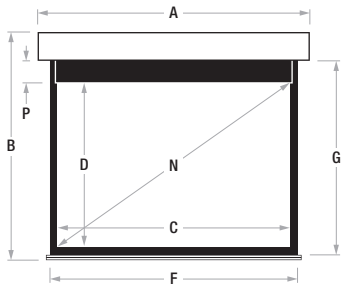

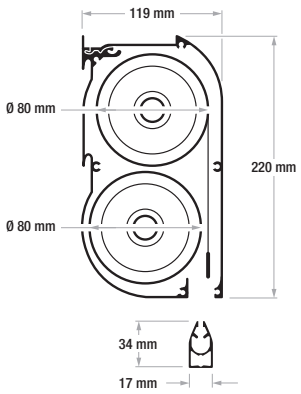

Surface Fireproof Certifications

Biformat

Tensio Classic 50 mm borders

	Max Viewing Width	Max Viewing Heigh	Max Overall Width	Max Overall Height	Max Surface Width	Max Surface Height	Standard Drop	Total Maximum Drop	Packaging Dimensions	Net Weight	Gross Weight
	C	D	A	B	F	G	P	mm	mm	kg	kg
Biformat	1830	1830	2250	2234	1930	1980	100	400	1838x300x330	34	39
	2080	2080	2500	2484	2180	2230	100	400	2088x300x330	40	45
	2330	2330	2750	2734	2430	2480	100	400	2338x300x330	47	52
	2580	2580	3000	2984	2680	2730	100	400	2588x300x330	55	60
	2830	2830	3250	3234	2930	2980	100	400	2838x300x330	58	63
	3080	3080	3500	3484	3180	3230	100	400	3088x300x330	60	65

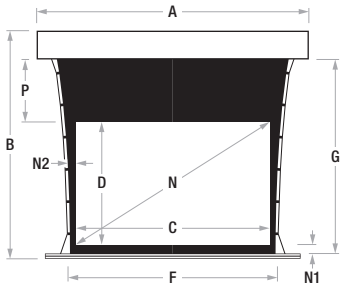

Custom sizes are available upon request

Configuration Examples	Native Format	Ratio	Net Surface Width	Net Surface Height	Diagonal Inches	Standard Drop	Bottom Black Border	Lateral Black Borders	2° Format	Ratio	Net Surface Width	Net Surface Height	Diagonal Inches	Standard Drop	Bottom Black Border	Lateral Black Borders
			C	D	N	P	N1	N2			C	D	N	P	N1	N2
2250	4:3	1,33	1830	1376	**90**	100	50	50	16:9	1,78	1830	1028	**83**	274	50	50
	4:3	1,33	1830	1376	**90**	100	50	50	21:9	2,35	1830	779	**78**	399	50	50
	16:9	1,78	1830	1028	**83**	100	50	50	21:9	2,35	1830	779	**78**	225	50	50
	16:9	1,78	1830	1028	**83**	100	50	50	4:3	1,33	1367	1028	**67**	100	50	281
	21:9	2,35	1830	779	**78**	100	50	50	16:9	1,78	1386	779	**63**	100	50	272
	21:9	2,35	1830	779	**78**	100	50	50	4:3	1,33	1036	779	**51**	100	50	447
2500	4:3	1,33	2080	1564	**102**	100	50	50	16:9	1,78	2080	1169	**94**	298	50	50
	4:3	1,33	2080	1564	**102**	100	50	50	21:9	2,35	2080	885	**89**	439	50	50
	16:9	1,78	2080	1169	**94**	100	50	50	21:9	2,35	2080	885	**89**	242	50	50
	16:9	1,78	2080	1169	**94**	100	50	50	4:3	1,33	1554	1169	**77**	100	50	313
	21:9	2,35	2080	885	**89**	100	50	50	16:9	1,78	1575	885	**71**	100	50	302
	21:9	2,35	2080	885	**89**	100	50	50	4:3	1,33	1177	885	**58**	100	50	501
2750	4:3	1,33	2330	1752	**115**	100	50	50	16:9	1,78	2330	1309	**105**	321	50	50
	4:3	1,33	2330	1752	**115**	100	50	50	21:9	2,35	2330	991	**100**	480	50	50
	16:9	1,78	2330	1309	**105**	100	50	50	21:9	2,35	2330	991	**100**	259	50	50
	16:9	1,78	2330	1309	**105**	100	50	50	4:3	1,33	1741	1309	**86**	100	50	345
	21:9	2,35	2330	991	**100**	100	50	50	16:9	1,78	1765	991	**80**	100	50	333
	21:9	2,35	2330	991	**100**	100	50	50	4:3	1,33	1319	991	**65**	100	50	556
3000	4:3	1,33	2580	1940	**127**	100	50	50	16:9	1,78	2580	1449	**117**	345	50	50
	4:3	1,33	2580	1940	**127**	100	50	50	21:9	2,35	2580	1098	**110**	519	50	50
	16:9	1,78	2580	1449	**117**	100	50	50	21:9	2,35	2580	1098	**110**	276	50	50
	16:9	1,78	2580	1449	**117**	100	50	50	4:3	1,33	1928	1449	**95**	100	50	376
	21:9	2,35	2580	1098	**110**	100	50	50	16:9	1,78	1954	1098	**88**	100	50	363
	21:9	2,35	2580	1098	**110**	100	50	50	4:3	1,33	1460	1098	**72**	100	50	610
3250	4:3	1,33	2830	2128	**139**	100	50	50	16:9	1,78	2830	1590	**128**	367	50	50
	4:3	1,33	2830	2128	**139**	100	50	50	21:9	2,35	2830	1204	**121**	562	50	50
	16:9	1,78	2830	1590	**128**	100	50	50	21:9	2,35	2830	1204	**121**	293	50	50
	16:9	1,78	2830	1590	**128**	100	50	50	4:3	1,33	2115	1590	**104**	100	50	408
	21:9	2,35	2830	1204	**121**	100	50	50	16:9	1,78	2144	1204	**97**	100	50	393
	21:9	2,35	2830	1204	**121**	100	50	50	4:3	1,33	1602	1204	**79**	100	50	664
3500	4:3	1,33	3080	2316	**152**	100	50	50	16:9	1,78	3080	1730	**139**	393	50	50
	4:3	1,33	3080	2316	**152**	100	50	50	21:9	2,35	3080	1311	**132**	603	50	50
	16:9	1,78	3080	1730	**139**	100	50	50	21:9	2,35	3080	1311	**132**	310	50	50
	16:9	1,78	3080	1730	**139**	100	50	50	4:3	1,33	2301	1730	**114**	100	50	439
	21:9	2,35	3080	1311	**132**	100	50	50	16:9	1,78	2333	1311	**105**	100	50	424
	21:9	2,35	3080	1311	**132**	100	50	50	4:3	1,33	1743	1311	**86**	100	50	718

Custom sizes are available upon request

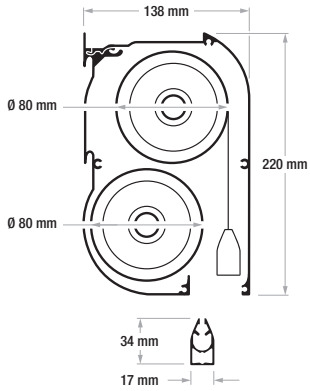

REACH COMPLIANCE · CE · RoHS COMPLIANT · M1 M2 Surface Fireproof Certifications

Biformat

Tensio Classic 70 mm borders

	Max Viewing Width	mAx Viewing Heinght	Max Overall Width	Max Overall Height	Max Surface Width	Max Surface Height	Standard Drop	Total Maximum Drop	Packaging Dimensions	Net Weight	Gross Weight
	C	D	A	B	F	G	P	mm	mm	kg	kg
Biformat	1790	1790	2250	2214	1890	1960	100	400	1798x300x330	34	39
	2040	2040	2500	2464	2140	2210	100	400	2048x300x330	40	45
	2290	2290	2750	2714	2390	2460	100	400	2298x300x330	47	52
	2540	2540	3000	2964	2640	2710	100	400	2548x300x330	55	60
	2790	2790	3250	3214	2890	2960	100	400	2798x300x330	58	63
	3040	3040	3500	3464	3140	3210	100	400	3048x300x330	60	65

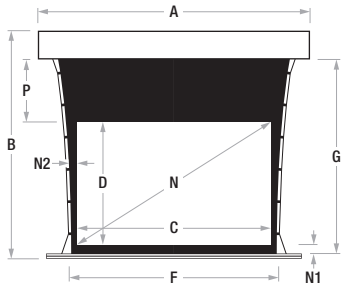

Custom sizes are available upon request

Configuration Examples	Native Format	Ratio	Net Surface Width	Net Surface Height	Diagonal Inches	Standard Drop	Bottom Black Border	Lateral Black Borders	2° Format	Ratio	Net Surface Width	Net Surface Height	Diagonal Inches	Standard Drop	Bottom Black Border	Lateral Black Borders
			C	D	N	P	N1	N2			C	D	N	P	N1	N2
2250	4:3	1,33	1790	1346	**88**	100	70	70	16:9	1,78	1790	1006	**81**	270	70	70
	4:3	1,33	1790	1346	**88**	100	70	70	21:9	2,35	1790	762	**77**	392	70	70
	16:9	1,78	1790	1006	**81**	100	70	70	21:9	2,35	1790	762	**77**	222	70	70
	16:9	1,78	1790	1006	**81**	100	70	70	4:3	1,33	1337	1006	**66**	100	70	296
	21:9	2,35	1790	762	**77**	100	70	70	16:9	1,78	1356	762	**61**	100	70	287
	21:9	2,35	1790	762	**77**	100	70	70	4:3	1,33	1013	762	**50**	100	70	458
2500	4:3	1,33	2040	1534	**100**	100	70	70	16:9	1,78	2040	1146	**92**	294	70	70
	4:3	1,33	2040	1534	**100**	100	70	70	21:9	2,35	2040	868	**87**	433	70	70
	16:9	1,78	2040	1146	**92**	100	70	70	21:9	2,35	2040	868	**87**	239	70	70
	16:9	1,78	2040	1146	**92**	100	70	70	4:3	1,33	1524	1146	**75**	100	70	328
	21:9	2,35	2040	868	**87**	100	70	70	16:9	1,78	1545	868	**70**	100	70	317
	21:9	2,35	2040	868	**87**	100	70	70	4:3	1,33	1155	868	**57**	100	70	513
2750	4:3	1,33	2290	1722	**113**	100	70	70	16:9	1,78	2290	1287	**103**	318	70	70
	4:3	1,33	2290	1722	**113**	100	70	70	21:9	2,35	2290	974	**98**	474	70	70
	16:9	1,78	2290	1287	**103**	100	70	70	21:9	2,35	2290	974	**98**	256	70	70
	16:9	1,78	2290	1287	**103**	100	70	70	4:3	1,33	1711	1287	**84**	100	70	359
	21:9	2,35	2290	974	**98**	100	70	70	16:9	1,78	1735	974	**78**	100	70	348
	21:9	2,35	2290	974	**98**	100	70	70	4:3	1,33	1296	974	**64**	100	70	567
3000	4:3	1,33	2540	1910	**125**	100	70	70	16:9	1,78	2540	1427	**115**	341	70	70
	4:3	1,33	2540	1910	**125**	100	70	70	21:9	2,35	2540	1081	**109**	514	70	70
	16:9	1,78	2540	1427	**115**	100	70	70	21:9	2,35	2540	1081	**109**	273	70	70
	16:9	1,78	2540	1427	**115**	100	70	70	4:3	1,33	1898	1427	**93**	100	70	391
	21:9	2,35	2540	1081	**109**	100	70	70	16:9	1,78	1924	1081	**87**	100	70	378
	21:9	2,35	2540	1081	**109**	100	70	70	4:3	1,33	1438	1081	**71**	100	70	621
3250	4:3	1,33	2790	2098	**137**	100	70	70	16:9	1,78	2790	1567	**126**	365	70	70
	4:3	1,33	2790	2098	**137**	100	70	70	21:9	2,35	2790	1187	**119**	555	70	70
	16:9	1,78	2790	1567	**126**	100	70	70	21:9	2,35	2790	1187	**119**	290	70	70
	16:9	1,78	2790	1567	**126**	100	70	70	4:3	1,33	2085	1567	**103**	100	70	423
	21:9	2,35	2790	1187	**119**	100	70	70	16:9	1,78	2113	1187	**95**	100	70	408
	21:9	2,35	2790	1187	**119**	100	70	70	4:3	1,33	1579	1187	**78**	100	70	675
3500	4:3	1,33	3040	2286	**150**	100	70	70	16:9	1,78	3040	1708	**137**	389	70	70
	4:3	1,33	3040	2286	**150**	100	70	70	21:9	2,35	3040	1294	**130**	596	70	70
	16:9	1,78	3040	1708	**137**	100	70	70	21:9	2,35	3040	1294	**130**	307	70	70
	16:9	1,78	3040	1708	**137**	100	70	70	4:3	1,33	2271	1708	**112**	100	70	454
	21:9	2,35	3040	1294	**130**	100	70	70	16:9	1,78	2303	1294	**104**	100	70	439
	21:9	2,35	3040	1294	**130**	100	70	70	4:3	1,33	1721	1294	**85**	100	70	730

Custom sizes are available upon request

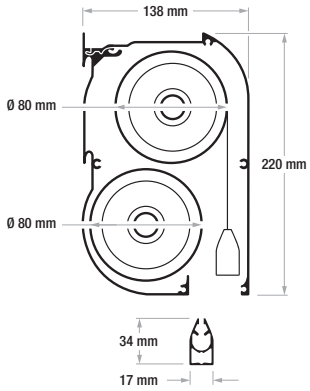

Surface Fireproof Certifications

Biformat 50 mm borders

	Max Viewing Width	Max Viewing Heigh	Max Overall Width	Max Overall Height	Max Surface Width	Max Surface Height	Standard Drop	Total Maximum Drop	Packaging Dimensions	Net Weight	Gross Weight
	C	D	A	B	F	G	P	mm	mm	kg	kg
Biformat	2080	2080	2250	2484	2090	2230	100	400	2258x300x330	34	39
	2330	2330	2500	2734	2340	2480	100	400	2508x300x330	40	45
	2580	2580	2750	2984	2590	2730	100	400	2758x300x330	47	52
	2830	2830	3000	3234	2840	2980	100	400	3008x300x330	55	60
	3080	3080	3250	3484	3090	3230	100	400	3258x300x330	58	63
	3330	3330	3500	3734	3340	3480	100	400	3508x300x330	60	65

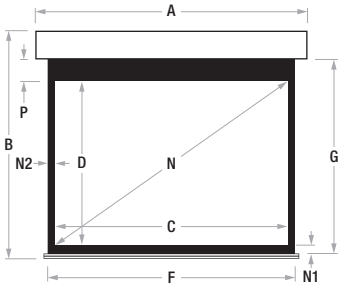

Custom sizes are available upon request

Configuration Examples Overall Width	Native Format	Ratio	Net Surface Width	Net Surface Height	Diagonal Inches	Standard Drop	Bottom Black Border	Lateral Black Borders	2° Format	Ratio	Net Surface Width	Net Surface Height	Diagonal Inches	Standard Drop	Bottom Black Border	Lateral Black Borders
			C	D	N	P	N1	N2			C	D	N	P	N1	N2
2250	4:3	1,33	2080	1564	**102**	100	50	50	16:9	1,78	2080	1169	**94**	298	50	50
	4:3	1,33	2080	1564	**102**	100	50	50	21:9	2,35	2080	885	**89**	439	50	50
	16:9	1,78	2080	1169	**94**	100	50	50	21:9	2,35	2080	885	**89**	242	50	50
	16:9	1,78	2080	1169	**94**	100	50	50	4:3	1,33	1554	1169	**77**	100	50	313
	21:9	2,35	2080	885	**89**	100	50	50	16:9	1,78	1575	885	**71**	100	50	302
	21:9	2,35	2080	885	**89**	100	50	50	4:3	1,33	1177	885	**58**	100	50	501
2500	4:3	1,33	2330	1752	**115**	100	50	50	16:9	1,78	2330	1309	**105**	321	50	50
	4:3	1,33	2330	1752	**115**	100	50	50	21:9	2,35	2330	991	**100**	480	50	50
	16:9	1,78	2330	1309	**105**	100	50	50	21:9	2,35	2330	991	**100**	259	50	50
	16:9	1,78	2330	1309	**105**	100	50	50	4:3	1,33	1741	1309	**86**	100	50	376
	21:9	2,35	2330	991	**100**	100	50	50	16:9	1,78	1765	991	**80**	100	50	333
	21:9	2,35	2330	991	**100**	100	50	50	4:3	1,33	1319	991	**65**	100	50	556
2750	4:3	1,33	2580	1940	**127**	100	50	50	16:9	1,78	2580	1449	**117**	345	50	50
	4:3	1,33	2580	1940	**127**	100	50	50	21:9	2,35	2580	1098	**110**	521	50	50
	16:9	1,78	2580	1449	**117**	100	50	50	21:9	2,35	2580	1098	**110**	276	50	50
	16:9	1,78	2580	1449	**117**	100	50	50	4:3	1,33	1928	1449	**95**	100	50	376
	21:9	2,35	2580	1098	**110**	100	50	50	16:9	1,78	1954	1098	**88**	100	50	363
	21:9	2,35	2580	1098	**110**	100	50	50	4:3	1,33	1460	1098	**72**	100	50	610
3000	4:3	1,33	2830	2128	**139**	100	50	50	16:9	1,78	2830	1590	**128**	369	50	50
	4:3	1,33	2830	2128	**139**	100	50	50	21:9	2,35	2830	1204	**121**	562	50	50
	16:9	1,78	2830	1590	**128**	100	50	50	21:9	2,35	2830	1204	**121**	293	50	50
	16:9	1,78	2830	1590	**128**	100	50	50	4:3	1,33	2115	1590	**104**	100	50	408
	21:9	2,35	2830	1204	**121**	100	50	50	16:9	1,78	2144	1204	**97**	100	50	393
	21:9	2,35	2830	1204	**121**	100	50	50	4:3	1,33	1602	1204	**79**	100	50	664
3250	4:3	1,33	3080	2316	**152**	100	50	50	16:9	1,78	3080	1730	**139**	393	50	50
	4:3	1,33	3080	2316	**152**	100	50	50	21:9	2,35	3080	1311	**132**	603	50	50
	16:9	1,78	3080	1730	**139**	100	50	50	21:9	2,35	3080	1311	**132**	310	50	50
	16:9	1,78	3080	1730	**139**	100	50	50	4:3	1,33	2301	1730	**114**	100	50	439
	21:9	2,35	3080	1311	**132**	100	50	50	16:9	1,78	2333	1311	**105**	100	50	424
	21:9	2,35	3080	1311	**132**	100	50	50	4:3	1,33	1743	1311	**86**	100	50	718
3500	4:3	1,33	3330	2504	**164**	100	50	50	16:9	1,78	3330	1871	**150**	416	50	50
	4:3	1,33	3330	2504	**164**	100	50	50	21:9	2,35	3330	1417	**142**	643	50	50
	16:9	1,78	3330	1871	**150**	100	50	50	21:9	2,35	3330	1417	**142**	327	50	50
	16:9	1,78	3330	1871	**150**	100	50	50	4:3	1,33	2488	1871	**123**	100	50	471
	21:9	2,35	3330	1417	**142**	100	50	50	16:9	1,78	2522	1417	**114**	100	50	454
	21:9	2,35	3330	1417	**142**	100	50	50	4:3	1,33	1885	1417	**93**	100	50	773

Custom sizes are available upon request

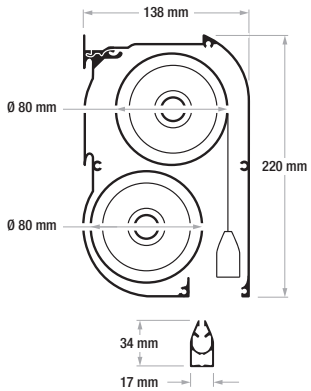

REACH COMPLIANCE CE RoHS COMPLIANT M1 M2 Surface Fireproof Certifications

Biformat 70 mm borders

	Max Viewing Width	Max Viewing Heigh	Max Overall Width	Max Overall Height	Max Surface Width	Max Surface Height	Standard Drop	Total Maximum Drop	Packaging Dimensions	Net Weight	Gross Weight
	C	D	A	B	F	G	P	mm	mm	kg	kg
Biformat	2040	2040	2250	2464	2050	2210	100	400	2258x300x330	34	39
	2290	2290	2500	2714	2300	2460	100	400	2508x300x330	40	45
	2540	2540	2750	2964	2550	2710	100	400	2758x300x330	47	52
	2790	2790	3000	3214	2800	2960	100	400	3008x300x330	55	60
	3040	3040	3250	3464	3050	3210	100	400	3258x300x330	58	63
	3290	3290	3500	3714	3300	3460	100	400	3508x300x330	60	65

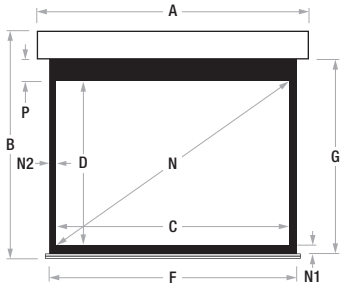

Custom sizes are available upon request

Configuration Examples Overall Width	Native Format	Ratio	Net Surface Width	Net Surface Height	Diagonal Inches	Standard Drop	Bottom Black Border	Lateral Black Borders	2° Format	Ratio	Net Surface Width	Net Surface Height	Diagonal Inches	Standard Drop	Bottom Black Border	Lateral Black Borders
			C	D	N	P	N1	N2			H	I	O	P	N1	H
2250	4:3	1,33	2040	1534	**100**	100	70	70	16:9	1,78	2040	1146	**92**	294	70	70
	4:3	1,33	2040	1534	**100**	100	70	70	21:9	2,35	2040	868	**87**	433	70	70
	16:9	1,78	2040	1146	**92**	100	70	70	21:9	2,35	2040	868	**87**	239	70	70
	16:9	1,78	2040	1146	**92**	100	70	70	4:3	1,33	1524	1146	**75**	100	70	328
	21:9	2,35	2040	868	**87**	100	70	70	16:9	1,78	1545	868	**70**	100	70	317
	21:9	2,35	2040	868	**87**	100	70	70	4:3	1,33	1155	868	**57**	100	70	513
2500	4:3	1,33	2290	1722	**113**	100	70	70	16:9	1,78	2290	1287	**103**	318	70	70
	4:3	1,33	2290	1722	**113**	100	70	70	21:9	2,35	2290	974	**98**	474	70	70
	16:9	1,78	2290	1287	**103**	100	70	70	21:9	2,35	2290	974	**98**	256	70	70
	16:9	1,78	2290	1287	**103**	100	70	70	4:3	1,33	1711	1287	**84**	100	70	359
	21:9	2,35	2290	974	**98**	100	70	70	16:9	1,78	1735	974	**78**	100	70	348
	21:9	2,35	2290	974	**98**	100	70	70	4:3	1,33	2196	974	**64**	100	70	567
2750	4:3	1,33	2540	1910	**125**	100	70	70	16:9	1,78	2540	1427	**115**	341	70	70
	4:3	1,33	2540	1910	**125**	100	70	70	21:9	2,35	2540	1081	**109**	514	70	70
	16:9	1,78	2540	1427	**115**	100	70	70	21:9	2,35	2540	1081	**109**	273	70	70
	16:9	1,78	2540	1427	**115**	100	70	70	4:3	1,33	1898	1427	**93**	100	70	391
	21:9	2,35	2540	1081	**109**	100	70	70	16:9	1,78	1924	1081	**87**	100	70	378
	21:9	2,35	2540	1081	**109**	100	70	70	4:3	1,33	1438	1081	**71**	100	70	621
3000	4:3	1,33	2790	2098	**137**	100	70	70	16:9	1,78	2790	1567	**126**	365	70	70
	4:3	1,33	2790	2098	**137**	100	70	70	21:9	2,35	2790	1187	**119**	555	70	70
	16:9	1,78	2790	1567	**126**	100	70	70	21:9	2,35	2790	1187	**119**	290	70	70
	16:9	1,78	2790	1567	**126**	100	70	70	4:3	1,33	2085	1567	**103**	100	70	423
	21:9	2,35	2790	1187	**119**	100	70	70	16:9	1,78	2113	1187	**95**	100	70	408
	21:9	2,35	2790	1187	**119**	100	70	70	4:3	1,33	1579	1187	**78**	100	70	675
3250	4:3	1,33	3040	2286	**150**	100	70	70	16:9	1,78	3040	1708	**137**	389	70	70
	4:3	1,33	3040	2286	**150**	100	70	70	21:9	2,35	3040	1294	**130**	596	70	70
	16:9	1,78	3040	1708	**137**	100	70	70	21:9	2,35	3040	1294	**130**	307	70	70
	16:9	1,78	3040	1708	**137**	100	70	70	4:3	1,33	2271	1708	**112**	100	70	454
	21:9	2,35	3040	1294	**130**	100	70	70	16:9	1,78	2303	1294	**104**	100	70	439
	21:9	2,35	3040	1294	**130**	100	70	70	4:3	1,33	1721	1294	**85**	100	70	730
3500	4:3	1,33	3290	2474	**162**	100	70	70	16:9	1,78	3290	1848	**149**	413	70	70
	4:3	1,33	3290	2474	**162**	100	70	70	21:9	2,35	3290	1400	**141**	637	70	70
	16:9	1,78	3290	1848	**149**	100	70	70	21:9	2,35	3290	1400	**141**	324	70	70
	16:9	1,78	3290	1848	**149**	100	70	70	4:3	1,33	2458	1848	**121**	100	70	486
	21:9	2,35	3290	1400	**141**	100	70	70	16:9	1,78	2492	1400	**113**	100	70	469
	21:9	2,35	3290	1400	**141**	100	70	70	4:3	1,33	1862	1400	**92**	100	70	784

Custom sizes are available upon request

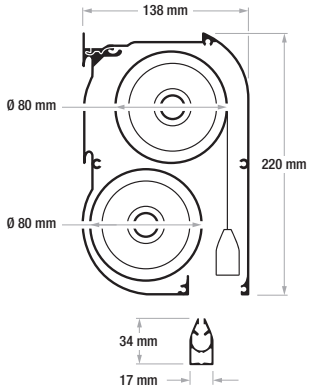

Surface Fireproof Certifications

Alumid

Tensio CTS 50 mm borders / without borders

Aspect Ratio	Viewing Width	Viewing Height	Diagonal Inches	Overall Width	Overall Height	Surface Width	Surface Height	Standard Drop	Total Maximum Drop	Packaging Dimensions	Net Weight	Gross Weight
	C	D	N	A	B	F	G	P	mm	mm	kg	kg
1,33 (4:3)	3630 4130	2729 3105	**179** **203**	4060 4560	3055 3431	3730 4230	2879 3255	100 100	200 200	4250x200x210 4750x200x210	36 41	42 45
1,60 (16:10)	3630 4130	2269 2581	**169** **192**	4060 4560	2595 2907	3730 4230	2419 2731	100 100	200 200	4250x200x210 4750x200x210	35 40	41 46
1,78 (16:9)	3630 4130	2039 2320	**164** **187**	4060 4560	2365 2646	3730 4230	2189 2470	100 100	450 450	4250x200x210 4750x200x210	35 40	41 46
2,35 (21:9)	3630 4130	1545 1757	**155** **177**	4060 4560	1871 2083	3730 4230	1695 1907	100 100	450 450	4250x200x210 4750x200x210	35 40	41 46
2,37	3630 4130	1532 1743	**155** **176**	4060 4560	1858 2069	3730 4230	1682 1893	100 100	450 450	4250x200x210 4750x200x210	35 40	41 46
2,40	3630 4130	1513 1721	**155** **176**	4060 4560	1839 2047	3730 4230	1663 1871	100 100	450 450	4250x200x210 4750x200x210	35 40	41 46

Custom sizes are available upon request

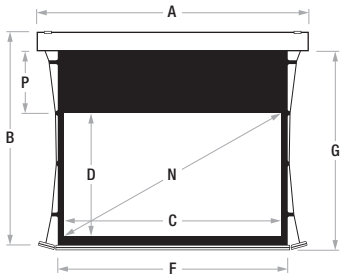

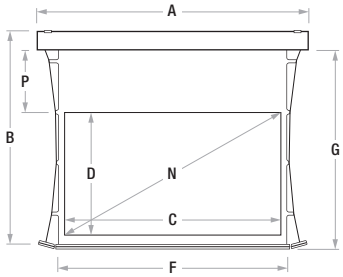

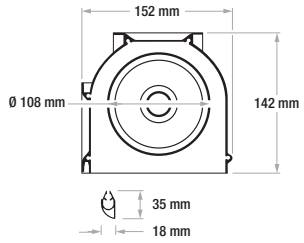

Surface Fireproof Certifications

Alumid 50 mm borders

Aspect Ratio	Viewing Width	Viewing Height	Diagonal Inches	Overall Width	Overall Height	Surface Width	Surface Height	Standard Drop	Total Maximum Drop	Packaging Dimensions	Net Weight	Gross Weight
	C	D	N	A	B	F	G	P	mm	mm	kg	kg
1,33 (4:3)	3900	2932	**192**	4060	3258	4000	3082	100	200	4250x200x210	36	42
1,60 (16:10)	3900	2438	**181**	4060	2764	4000	2588	100	200	4250x200x210	35	41
1,78 (16:9)	3900	2191	**176**	4060	2517	4000	2341	100	450	4250x200x210	35	41
2,35 (21:9)	3900	1660	**167**	4060	1986	4000	1810	100	450	4250x200x210	35	41
2,37	3900	1646	**167**	4060	1972	4000	1796	100	450	4250x200x210	35	41
2,40	3900	1625	**166**	4060	1951	4000	1775	100	450	4250x200x210	35	41

Custom sizes are available upon request

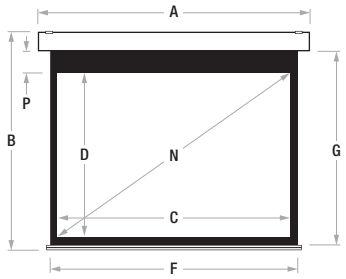

Alumid Without borders

Aspect Ratio	Viewing Width	Viewing Height	Diagonal Inches	Overall Width	Overall Height	Packaging Dimensions	Net Weight	Gross Weight
	C	D	N	A	B	mm	kg	kg
1,00 (1:1)	3500	3500	**195**	3560	3677	3760x150x180	32	38
	4000	4000	**223**	4060	4177	4260x150x180	35	41
	4500	4500	**251**	4560	4677	4760x150x180	42	48
1,33 (4:3)	4000	3008	**197**	4060	3185	4260x150x180	36	42
	4500	3383	**222**	4560	3560	4760x150x180	41	47
1,60 (16:10)	4000	2500	**186**	4060	2677	4260x150x180	36	42
	4500	2813	**209**	4560	2990	4760x150x180	41	47
1,78 (16:9)	4000	2247	**181**	4060	2424	4260x150x180	41	35
	4500	2528	**203**	4560	2705	4760x150x180	40	46
2,35 (21:9)	4000	1702	**171**	4060	1879	4260x150x180	41	35
	4500	1915	**193**	4560	2092	4760x150x180	40	46
2,37	4000	1688	**171**	4060	1865	4260x150x180	41	35
	4500	1899	**192**	4560	2076	4760x150x180	40	46
2,39	4000	1674	**171**	4060	1851	4260x150x180	41	35
	4500	1883	**192**	4560	2060	4760x150x180	40	46
2,40	4000	1667	**171**	4060	1844	4260x150x180	41	35
	4500	1875	**192**	4560	2052	4760x150x180	40	46

Custom sizes are available upon request

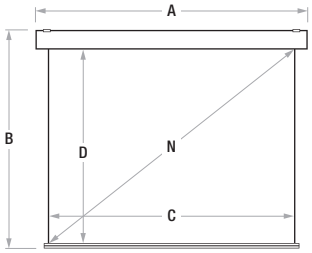

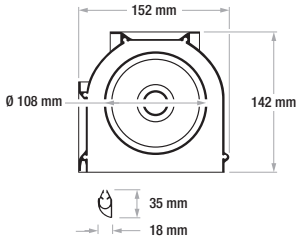

Surface Fireproof Certifications

Max One MFTS

Max Floating Tensio System with 50 mm borders / without borders

Aspect Ratio	Viewing Width	Viewing Height	Diagonal Inches	Overall Width	Overall Height	Surface Width	Surface Height	Standard Drop	Total Maximum Drop	Packaging Dimensions	Net Weight	Gross Weight
	C	D	N	A	B	F	G	P	mm	mm	kg	kg
1,33 (4:3)	4640	3489	**229**	5100	3893	4740	3639	100	200	5280x290x320	76	101
	5140	3865	**253**	5600	4269	5240	4015	100	200	5780x290x320	84	109
	5640	4241	**278**	6100	4645	5740	4391	100	200	6280x290x320	92	117
1,60 (16:10)	4640	2900	**215**	5100	3304	4740	3050	100	200	5280x290x320	74	99
	5140	3213	**239**	5600	3617	5240	3363	100	200	5780x290x320	82	107
	5640	3525	**262**	6100	3929	5740	3675	100	200	6280x290x320	90	115
1,78 (16:9)	4640	2607	**210**	5100	3011	4740	2757	100	200	5280x290x320	74	99
	5140	2888	**232**	5600	3292	5240	3038	100	200	5780x290x320	82	107
	5640	3169	**255**	6100	3573	5740	3319	100	200	6280x290x320	90	115
2,35 (21:9)	4640	1974	**199**	5100	2378	4740	2124	100	200	5280x290x320	73	98
	5140	2187	**220**	5600	2591	5240	2337	100	200	5780x290x320	81	106
	5640	2400	**241**	6100	2804	5740	2550	100	200	6280x290x320	89	114
2,37	4640	1958	**198**	5100	2362	4740	2108	100	200	5280x290x320	73	98
	5140	2169	**220**	5600	2573	5240	2319	100	200	5780x290x320	81	106
	5640	2380	**241**	6100	2784	5740	2530	100	200	6280x290x320	89	114
2,39	4640	1941	**198**	5100	2345	4740	2091	100	200	5280x290x320	73	98
	5140	2151	**219**	5600	2555	5240	2301	100	200	5780x290x320	81	106
	5640	2360	**241**	6100	2764	5740	2510	100	200	6280x290x320	89	114
2,40	4640	1933	**198**	5100	2337	4740	2083	100	200	5280x290x320	73	98
	5140	2142	**219**	5600	2546	5240	2292	100	200	5780x290x320	81	106
	5640	2350	**241**	6100	2754	5740	2500	100	200	6280x290x320	89	114

Custom sizes are available upon request

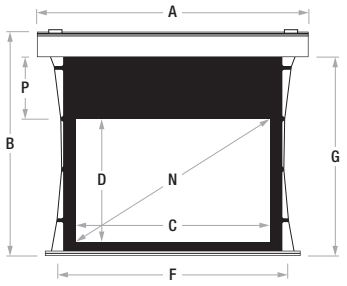

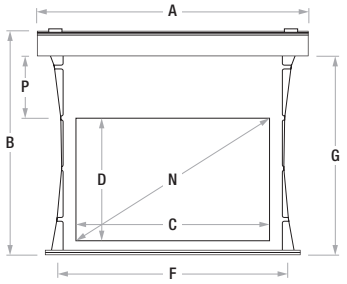

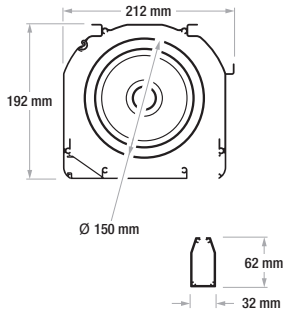

Surface Fireproof Certifications

Max One Without borders

Aspect Ratio	Viewing Width	Viewing Height	Diagonal Inches	Overall Width	Overall Height	Packaging Dimensions	Net Weight	Gross Weight
	C	D	N	A	B	mm	kg	kg
1,00 (1:1)	5000	5000	**278**	5100	5226	5280x290x320	80	105
1,33 (4:3)	5000	3759	**246**	5100	3985	5280x290x320	76	101
	5500	4135	**271**	5600	4361	5780x290x320	84	109
	6000	4511	**296**	6100	4737	6280x290x320	92	117
	6500	4887	**320**	6600	5113	6780x290x320	103	123
1,60 (16:10)	5000	3125	**232**	5100	3351	5280x290x320	74	99
	5500	3438	**255**	5600	3664	5780x290x320	82	107
	6000	3750	**279**	6100	3976	6280x290x320	90	115
	6500	4063	**302**	6600	4289	6780x290x320	101	126
1,78 (16:9)	5000	2809	**226**	5100	3035	5280x290x320	74	99
	5500	3090	**248**	5600	3316	5780x290x320	82	107
	6000	3371	**271**	6100	3597	6280x290x320	90	115
	6500	3652	**294**	6600	3878	6780x290x320	101	126
2,35 (21:9)	5000	2128	**214**	5100	2354	5280x290x320	73	98
	5500	2340	**235**	5600	2566	5780x290x320	81	106
	6000	2553	**257**	6100	2779	6280x290x320	89	114
	6500	2766	**278**	6600	2992	6780x290x320	100	125
2,37	5000	2110	**214**	5100	2336	5280x290x320	73	98
	5500	2321	**235**	5600	2547	5780x290x320	81	106
	6000	2532	**256**	6100	2758	6280x290x320	89	114
	6500	2743	**278**	6600	2969	6780x290x320	100	125
2,39	5000	2092	**213**	5100	2318	5280x290x320	73	98
	5500	2301	**235**	5600	2527	5780x290x320	81	106
	6000	2510	**256**	6100	2736	6280x290x320	89	114
	6500	2720	**277**	6600	2946	6780x290x320	100	125
2,40	5000	2083	**213**	5100	2309	5280x290x320	73	98
	5500	2292	**235**	5600	2518	5780x290x320	81	106
	6000	2500	**256**	6100	2726	6280x290x320	89	114
	6500	2708	**277**	6600	2934	6780x290x320	100	125

Custom sizes are available upon request

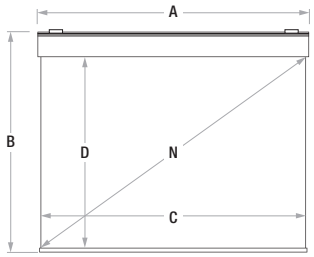

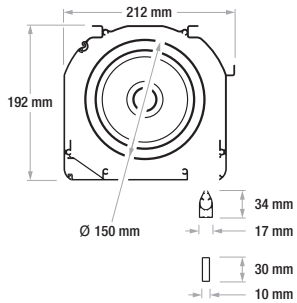

30 mm lower bar is used on screens with viewing width of 6500 mm

Surface Fireproof Certifications

Big One without borders

Aspect Ratio	Viewing Width	Viewing Height	Diagonal Inches	Overall Width	Overall Height	Packaging Dimensions	Net Weight	Gross Weight
	C	D	N”	A	B	mm	kg	kg
1,00 (1:1)	6000	6000	**334**	6100	6332	6180X470X470	188	244
	6500	6500	**362**	6600	6832	6680X470X470	202	262
1,33 (4:3)	7000	5263	**345**	7100	5595	7280X480X480	188	228
	7500	5639	**369**	7600	5971	7780X480X480	202	242
	8000	6015	**394**	8100	6347	8280X480X480	215	255
1,6 (16:10)	7000	4375	**325**	7100	4707	7280X480X480	188	228
	7500	4688	**348**	7600	5020	7780X480X480	202	242
	8000	5000	**371**	8100	5332	8280X480X480	215	255
	8500	5313	**395**	8600	5645	8780X480X480	228	268
1,78 (16:9)	7000	3933	**316**	7100	4265	7280X480X480	188	228
	7500	4213	**339**	7600	4545	7780X480X480	202	242
	8000	4494	**361**	8100	4826	8280X480X480	210	250
	8500	4775	**384**	8600	5107	8780X480X480	228	268

Custom sizes are available upon request

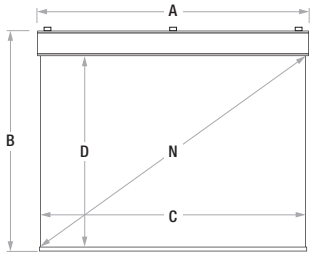

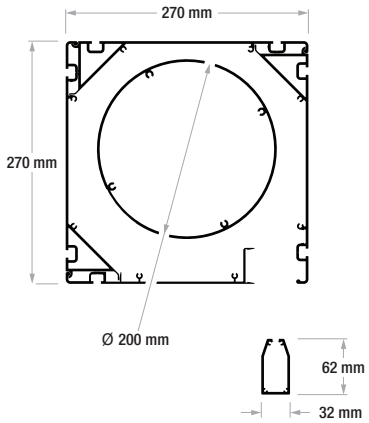

Surface Fireproof Certifications

Basic

Tensio CTS 50 mm borders

Aspect Ratio	Viewing Width	Viewing Height	Diagonal Inches	Overall Width	Overall Height	Surface Width	Surface Height	Standard Drop	Total Maximum Drop	Packaging Dimensions	Net Weight	Gross Weight
	C	D	N	A	B	F	G	P	mm	mm	kg	kg
1,00 (1:1)	2000	2000	**111**	2420	2246	2100	2100	50	50	2620x150x180	10	11
	2500	2500	**139**	2920	2746	2600	2600	50	50	3120x150x180	12	15
	3000	3000	**167**	3420	3246	3100	3100	50	50	3620x150x180	22	25
1,33 (4:3)	2000	1504	**99**	2420	2150	2100	1604	50	450	2620x150x180	10	11
	2500	1880	**123**	2920	2376	2600	1980	50	300	3120x150x180	12	15
	3000	2256	**148**	3420	2902	3100	2406	100	450	3620x150x180	22	25
	3500	2632	**172**	3920	3178	3600	2782	100	350	4120x150x180	25	30
	4000	3008	**197**	4430	3423	4100	3158	100	200	4630x150x180	33	39
	4500	3383	**222**	4930	3798	4600	3533	100	200	5130x150x180	38	43
	5000	3759	**246**	5480	4214	5100	3909	100	200	5680x150x180	53	75
	5500	4135	**271**	5980	4590	5600	4285	100	200	6180x150x180	59	81
1,60 (16:10)	2000	1250	**93**	2420	1896	2100	1350	50	450	2620x150x180	10	11
	2500	1563	**116**	2920	2209	2600	1663	50	450	3120x150x180	12	15
	3000	1875	**139**	3420	2521	3100	2025	100	450	3620x150x180	22	25
	3500	2188	**162**	3920	2834	3600	2338	100	450	4120x150x180	25	30
	4000	2500	**186**	4430	2915	4100	2650	100	200	4630x150x180	33	39
	4500	2813	**209**	4930	3228	4600	2963	100	200	5130x150x180	38	43
	5000	3125	**232**	5480	3580	5100	3275	100	200	5680x150x180	53	75
	5500	3438	**255**	5980	3893	5600	3588	100	200	6180x150x180	59	81
1,78 (16:9)	2000	1124	**90**	2420	1770	2100	1224	50	450	2620x150x180	10	11
	2500	1404	**113**	2920	2050	2600	1504	50	450	3120x150x180	12	15
	3000	1685	**135**	3420	2331	3100	1835	100	450	3620x150x180	22	25
	3500	1966	**158**	3920	2612	3600	2116	100	450	4120x150x180	25	30
	4000	2247	**181**	4430	2912	4100	2397	100	450	4630x150x180	33	39
	4500	2528	**203**	4930	3193	4600	2678	100	450	5130x150x180	38	43
	5000	2809	**226**	5480	3264	5100	2959	100	200	5680x150x180	53	75
	5500	3090	**248**	5980	3545	5600	3240	100	200	6180x150x180	59	81
2,35 (21:9)	2000	851	**86**	2420	1497	2100	951	50	450	2620x150x180	10	11
	2500	1064	**107**	2920	1710	2600	1164	50	450	3120x150x180	12	15
	3000	1277	**128**	3420	1923	3100	1427	100	450	3620x150x180	22	25
	3500	1489	**150**	3920	2135	3600	1639	100	450	4120x150x180	25	30
	4000	1702	**171**	4430	2367	4100	1852	100	450	4630x150x180	33	39
	4500	1915	**193**	4930	2580	4600	2065	100	450	5130x150x180	38	43
	5000	2128	**214**	5480	2583	5100	2278	100	200	5680x150x180	53	75
	5500	2340	**235**	5980	2795	5600	2490	100	200	6180x150x180	59	81
2,37	2000	844	**85**	2420	1490	2100	944	50	450	2620x150x180	10	11
	2500	1055	**107**	2920	1701	2600	1155	50	450	3120x150x180	12	15
	3000	1266	**128**	3420	1912	3100	1416	100	450	3620x150x180	22	25
	3500	1477	**150**	3920	2123	3600	1627	100	450	4120x150x180	25	30
	4000	1688	**171**	4430	2353	4100	1838	100	450	4630x150x180	33	39
	4500	1899	**192**	4930	2564	4600	2049	100	450	5130x150x180	38	43
	5000	2110	**214**	5480	2565	5100	2260	100	200	5680x150x180	53	75
	5500	2321	**235**	5980	2776	5600	2471	100	200	6180x150x180	59	81
2,39	2000	837	**85**	2420	1483	2100	937	50	450	2620x150x180	10	11
	2500	1046	**107**	2920	1692	2600	1146	50	450	3120x150x180	12	15
	3000	1255	**128**	3420	1901	3100	1405	100	450	3620x150x180	22	25
	3500	1464	**149**	3920	2110	3600	1614	100	450	4120x150x180	25	30
	4000	1674	**171**	4430	2339	4100	1824	100	450	4630x150x180	33	39
	4500	1883	**192**	4930	2548	4600	2033	100	450	5130x150x180	38	43
	5000	2092	**213**	5480	2547	5100	2242	100	200	5680x150x180	53	75
	5500	2301	**235**	5980	2756	5600	2451	100	200	6180x150x180	59	81
2,40	2000	833	**85**	2420	1479	2100	933	50	450	2620x150x180	10	11
	2500	1042	**107**	2920	1688	2600	1142	50	450	3120x150x180	12	15
	3000	1250	**128**	3420	1896	3100	1400	100	450	3620x150x180	22	25
	3500	1458	**149**	3920	2104	3600	1608	100	450	4120x150x180	25	30
	4000	1667	**171**	4430	2332	4100	1817	100	450	4630x150x180	33	39
	4500	1875	**192**	4930	2540	4600	2025	100	450	5130x150x180	38	43
	5000	2083	**213**	5480	2538	5100	2233	100	200	5680x150x180	53	75
	5500	2292	**235**	5980	2747	5600	2442	100	200	6180x150x180	59	81

Custom sizes are available upon request

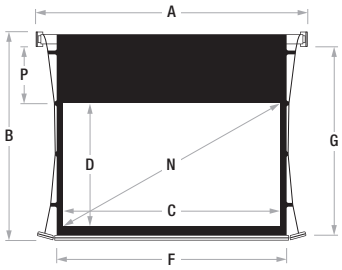

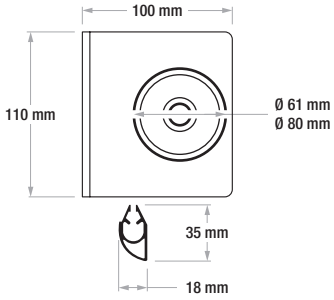

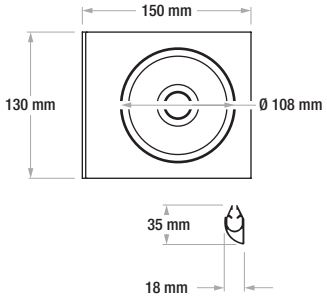

For screens with a viewing width of 3500mm (for the 1:1 format only) and from 4000mm to 4500mm, a roller with a diameter of 108mm is provided.

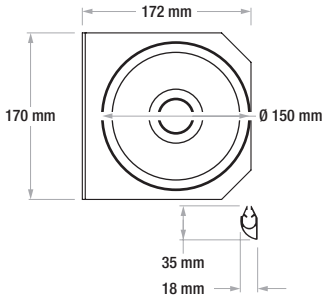

For screens with a viewing width of 5000mm and above, a roller with a diameter of 150mm is provided.

Surface Fireproof Certifications

Basic

Tensio CTS 70 mm borders

Aspect Ratio	Viewing Width	Viewing Height	Diagonal Inches	Overall Width	Overall Height	Surface Width	Surface Height	Standard Drop	Total Maximum Drop	Packaging Dimensions	Net Weight	Gross Weight
	C	D	N	A	B	F	G	P	mm	mm	kg	kg
1,00 (1:1)	2000	2000	**111**	2460	2286	2140	2140	70	70	2660x150x180	10	11
	2500	2500	**139**	2960	2786	2640	2640	70	70	3160x150x180	12	15
	3000	3000	**167**	3460	3286	3140	3140	70	70	3660x150x180	22	25
1,33 (4:3)	2000	1504	**99**	2460	1790	2140	1644	70	450	2660x150x180	10	11
	2500	1880	**123**	2960	2166	2640	2020	70	300	3160x150x180	12	15
	3000	2256	**148**	3460	2572	3140	2426	100	450	3660x150x180	22	25
	3500	2632	**172**	3960	2948	3640	2802	100	350	4160x150x180	25	30
	4000	3008	**197**	4470	3343	4140	3178	100	200	4670x150x180	33	39
	4500	3383	**222**	4970	3718	4640	3553	100	200	5170x150x180	38	43
	5000	3759	**246**	5520	4134	5140	3929	100	200	5720x150x180	53	75
	5500	4135	**271**	6020	4510	5640	4305	100	200	6220x150x180	59	81
1,60 (16:10)	2000	1250	**93**	2460	1536	2140	1390	70	450	2660x150x180	10	11
	2500	1563	**116**	2960	1849	2640	1703	70	450	3160x150x180	12	15
	3000	1875	**139**	3460	2191	3140	2045	100	450	3660x150x180	22	25
	3500	2188	**162**	3960	2504	3640	2358	100	450	4160x150x180	25	30
	4000	2500	**186**	4470	2835	4140	2670	100	200	4670x150x180	33	39
	4500	2813	**209**	4970	3148	4640	2983	100	200	5170x150x180	38	43
	5000	3125	**232**	5520	3500	5140	3295	100	200	5720x150x180	53	75
	5500	3438	**255**	6020	3813	5640	3608	100	200	6220x150x180	59	81
1,78 (16:9)	2000	1124	**90**	2460	1410	2140	1264	70	450	2660x150x180	10	11
	2500	1404	**113**	2960	1690	2640	1544	70	450	3160x150x180	12	15
	3000	1685	**135**	3460	2001	3140	1855	100	450	3660x150x180	22	25
	3500	1966	**158**	3960	2282	3640	2136	100	450	4160x150x180	25	30
	4000	2247	**181**	4470	2582	4140	2417	100	450	4670x150x180	33	39
	4500	2528	**203**	4970	2863	4640	2698	100	450	5170x150x180	38	43
	5000	2809	**226**	5520	3184	5140	2979	100	200	5720x150x180	53	75
	5500	3090	**248**	6020	3465	5640	3260	100	200	6220x150x180	59	81
2,35 (21:9)	2000	851	**86**	2460	1137	2140	991	70	450	2660x150x180	10	11
	2500	1064	**107**	2960	1350	2640	1204	70	450	3160x150x180	12	15
	3000	1277	**128**	3460	1593	3140	1447	100	450	3660x150x180	22	25
	3500	1489	**150**	3960	1805	3640	1659	100	450	4160x150x180	25	30
	4000	1702	**171**	4470	2037	4140	1872	100	450	4670x150x180	33	39
	4500	1915	**193**	4970	2250	4640	2085	100	450	5170x150x180	38	43
	5000	2128	**214**	5520	2503	5140	2298	100	200	5720x150x180	53	75
	5500	2340	**235**	6020	2715	5640	2510	100	200	6220x150x180	59	81
2,37	2000	844	**85**	2460	1130	2140	984	70	450	2660x150x180	10	11
	2500	1055	**107**	2960	1341	2640	1195	70	450	3160x150x180	12	15
	3000	1266	**128**	3460	1582	3140	1436	100	450	3660x150x180	22	25
	3500	1477	**150**	3960	1793	3640	1647	100	450	4160x150x180	25	30
	4000	1688	**171**	4470	2023	4140	1858	100	450	4670x150x180	33	39
	4500	1899	**192**	4970	2234	4640	2069	100	450	5170x150x180	38	43
	5000	2110	**214**	5520	2485	5140	2280	100	200	5720x150x180	53	75
	5500	2321	**235**	6020	2696	5640	2491	100	200	6220x150x180	59	81
2,39	2000	837	**85**	2460	1123	2140	977	70	450	2660x150x180	10	11
	2500	1046	**107**	2960	1332	2640	1186	70	450	3160x150x180	12	15
	3000	1255	**128**	3460	1571	3140	1425	100	450	3660x150x180	22	25
	3500	1464	**149**	3960	1780	3640	1634	100	450	4160x150x180	25	30
	4000	1674	**171**	4470	2009	4140	1844	100	450	4670x150x180	33	39
	4500	1883	**192**	4970	2218	4640	2053	100	450	5170x150x180	38	43
	5000	2092	**213**	5520	2467	5140	2262	100	200	5720x150x180	53	75
	5500	2301	**235**	6020	2676	5640	2471	100	200	6220x150x180	59	81
2,40	2000	833	**85**	2460	1119	2140	973	70	450	2660x150x180	10	11
	2500	1042	**107**	2960	1328	2640	1182	70	450	3160x150x180	12	15
	3000	1250	**128**	3460	1566	3140	1420	100	450	3660x150x180	22	25
	3500	1458	**149**	3960	1774	3640	1628	100	450	4160x150x180	25	30
	4000	1667	**171**	4470	2002	4140	1837	100	450	4670x150x180	33	39
	4500	1875	**192**	4970	2210	4640	2045	100	450	5170x150x180	38	43
	5000	2083	**213**	5520	2458	5140	2253	100	200	5720x150x180	53	75
	5500	2292	**235**	6020	2667	5640	2462	100	200	6220x150x180	59	81

Custom sizes are available upon request

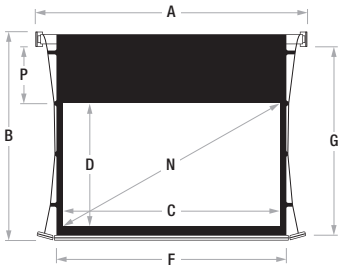

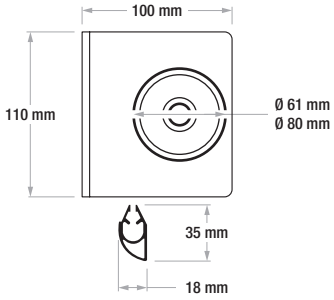

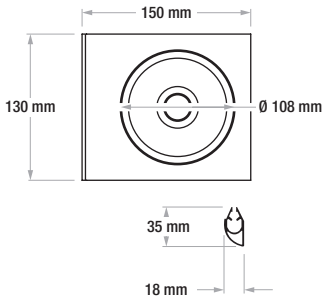

For screens with a viewing width of 3500mm (for the 1:1 format only) and from 4000mm to 4500mm, a roller with a diameter of 108mm is provided.

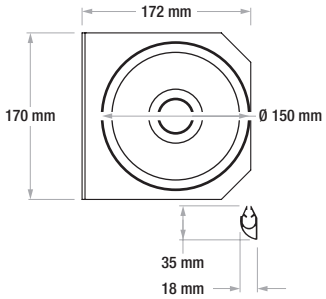

For screens with a viewing width of 5000mm and above, a roller with a diameter of 150mm is provided.

Surface Fireproof Certifications

Basic 50 mm borders

Aspect Ratio	Viewing Width	Viewing Height	Diagonal Inches	Overall Width	Overall Height	Surface Width	Surface Height	Standard Drop	Total Maximum Drop	Packaging Dimensions	Net Weight	Gross Weight
	C	D	N	A	B	F	G	P	mm	mm	kg	kg
1,00 (1:1)	2000	2000	**111**	2170	2246	2100	2100	50	50	2370x150x180	10	11
	2500	2500	**139**	2670	2746	2600	2600	50	50	2870x150x180	12	15
	3000	3000	**167**	3170	3246	3100	3100	50	50	3370x150x180	22	25
1,33 (4:3)	2000	1504	**99**	2170	1750	2100	1604	50	450	2370x150x180	10	11
	2500	1880	**123**	2670	2126	2600	1980	50	300	2870x150x180	12	15
	3000	2256	**148**	3170	2552	3100	2406	100	450	3370x150x180	22	25
	3500	2632	**172**	3670	2928	3600	2782	100	350	3870x150x180	25	30
	4000	3008	**197**	4160	3323	4100	3158	100	200	4360x150x180	33	39
1,60 (16:10)	2000	1250	**93**	2170	1496	2100	1350	50	450	2370x150x180	10	11
	2500	1563	**116**	2670	1809	2600	1663	50	450	2870x150x180	12	15
	3000	1875	**139**	3170	2171	3100	2025	100	450	3370x150x180	22	25
	3500	2188	**162**	3670	2484	3600	2338	100	450	3870x150x180	25	30
	4000	2500	**186**	4160	2815	4100	2650	100	200	4360x150x180	33	39
1,78 (16:9)	2000	1124	**90**	2170	1370	2100	1224	50	450	2370x150x180	10	11
	2500	1404	**113**	2670	1650	2600	1504	50	450	2870x150x180	12	15
	3000	1685	**135**	3170	1981	3100	1835	100	450	3370x150x180	22	25
	3500	1966	**158**	3670	2262	3600	2116	100	450	3870x150x180	25	30
	4000	2247	**181**	4160	2562	4100	2397	100	450	4360x150x180	33	39
2,35 (21:9)	2000	851	**86**	2170	1097	2100	951	50	450	2370x150x180	10	11
	2500	1064	**107**	2670	1310	2600	1164	50	450	2870x150x180	12	15
	3000	1277	**128**	3170	1573	3100	1427	100	450	3370x150x180	22	25
	3500	1489	**150**	3670	1785	3600	1639	100	450	3870x150x180	25	30
	4000	1702	**171**	4160	2017	4100	1852	100	450	4360x150x180	33	39
2,37	2000	844	**85**	2170	1090	2100	944	50	450	2370x150x180	10	11
	2500	1055	**107**	2670	1301	2600	1155	50	450	2870x150x180	12	15
	3000	1266	**128**	3170	1562	3100	1416	100	450	3370x150x180	22	25
	3500	1477	**150**	3670	1773	3600	1627	100	450	3870x150x180	25	30
	4000	1688	**171**	4160	2003	4100	1838	100	450	4360x150x180	33	39
2,39	2000	837	**85**	2170	1083	2100	937	50	450	2370x150x180	10	11
	2500	1046	**107**	2670	1292	2600	1146	50	450	2870x150x180	12	15
	3000	1255	**128**	3170	1551	3100	1405	100	450	3370x150x180	22	25
	3500	1464	**149**	3670	1760	3600	1614	100	450	3870x150x180	25	30
	4000	1674	**171**	4160	1989	4100	1824	100	450	4360x150x180	33	39
2,40	2000	833	**85**	2170	1079	2100	933	50	450	2370x150x180	10	11
	2500	1042	**107**	2670	1288	2600	1142	50	450	2870x150x180	12	15
	3000	1250	**128**	3170	1546	3100	1400	100	450	3370x150x180	22	25
	3500	1458	**149**	3670	1754	3600	1608	100	450	3870x150x180	25	30
	4000	1667	**171**	4160	1982	4100	1817	100	450	4360x150x180	33	39

Custom sizes are available upon request

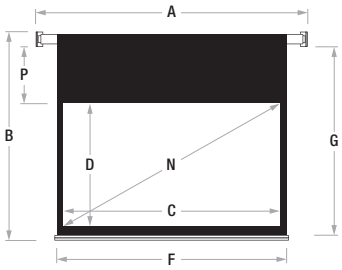

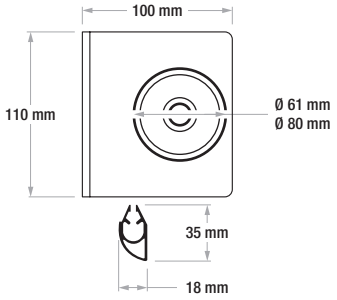

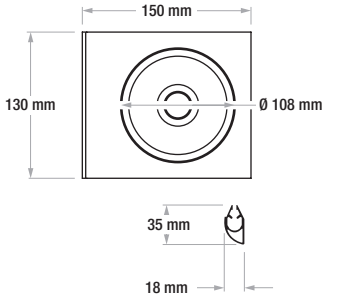

For screens with a viewing width of 3500mm (for the 1:1 format only) and from 4000mm to 4500mm, a roller with a diameter of 108mm is provided.

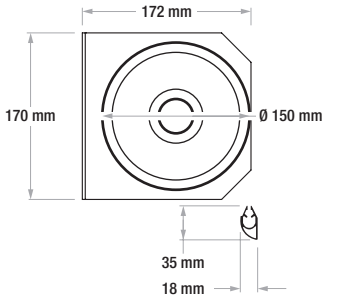

For screens with a viewing width of 5000mm and above, a roller with a diameter of 150mm is provided.

Surface Fireproof Certifications

Basic 70 mm borders

Aspect Ratio	Viewing Width	Viewing Height	Diagonal Inches	Overall Width	Overall Height	Surface Width	Surface Height	Standard Drop	Total Maximum Drop	Packaging Dimensions	Net Weight	Gross Weight
	C	D	N	A	B	F	G	P	mm	mm	kg	kg
1,00 (1:1)	2000	2000	**111**	2210	2286	2140	2140	70	70	2410x150x180	10	11
	2500	2500	**139**	2710	2786	2640	2640	70	70	2910x150x180	12	15
	3000	3000	**167**	3210	3286	3140	3140	70	70	3410x150x180	22	25
1,33 (4:3)	2000	1504	**99**	2210	1790	2140	1644	70	450	2410x150x180	10	11
	2500	1880	**123**	2710	2166	2640	2020	70	300	2910x150x180	12	15
	3000	2256	**148**	3210	2572	3140	2426	100	450	3410x150x180	22	25
	3500	2632	**172**	3710	2948	3640	2802	100	350	3910x150x180	25	30
	4000	3008	**197**	4210	3343	4140	3178	100	200	4410x150x180	33	39
1,60 (16:10)	2000	1250	**93**	2210	1536	2140	1390	70	450	2410x150x180	10	11
	2500	1563	**116**	2710	1849	2640	1703	70	450	2910x150x180	12	15
	3000	1875	**139**	3210	2191	3140	2045	100	450	3410x150x180	22	25
	3500	2188	**162**	3710	2504	3640	2358	100	450	3910x150x180	25	30
	4000	2500	**186**	4210	2835	4140	2670	100	200	4410x150x180	33	39
1,78 (16:9)	2000	1124	**90**	2210	1410	2140	1264	70	450	2410x150x180	10	11
	2500	1404	**113**	2710	1690	2640	1544	70	450	2910x150x180	12	15
	3000	1685	**135**	3210	2001	3140	1855	100	450	3410x150x180	22	25
	3500	1966	**158**	3710	2282	3640	2136	100	450	3910x150x180	25	30
	4000	2247	**181**	4210	2582	4140	2417	100	450	4410x150x180	33	39
2,35 (21:9)	2000	851	**86**	2210	1137	2140	991	70	450	2410x150x180	10	11
	2500	1064	**107**	2710	1350	2640	1204	70	450	2910x150x180	12	15
	3000	1277	**128**	3210	1593	3140	1447	100	450	3410x150x180	22	25
	3500	1489	**150**	3710	1805	3640	1659	100	450	3910x150x180	25	30
	4000	1702	**171**	4210	2037	4140	1872	100	450	4410x150x180	33	39
2,37	2000	844	**85**	2210	1130	2140	984	70	450	2410x150x180	10	11
	2500	1055	**107**	2710	1341	2640	1195	70	450	2910x150x180	12	15
	3000	1266	**128**	3210	1582	3140	1436	100	450	3410x150x180	22	25
	3500	1477	**150**	3710	1793	3640	1647	100	450	3910x150x180	25	30
	4000	1688	**171**	4210	2023	4140	1858	100	450	4410x150x180	33	39
2,39	2000	837	**85**	2210	1123	2140	977	70	450	2410x150x180	10	11
	2500	1046	**107**	2710	1332	2640	1186	70	450	2910x150x180	12	15
	3000	1255	**128**	3210	1571	3140	1425	100	450	3410x150x180	22	25
	3500	1464	**149**	3710	1780	3640	1634	100	450	3910x150x180	25	30
	4000	1674	**171**	4210	2009	4140	1844	100	450	4410x150x180	33	39
2,40	2000	833	**85**	2210	1119	2140	973	70	450	2410x150x180	10	11
	2500	1042	**107**	2710	1328	2640	1182	70	450	2910x150x180	12	15
	3000	1250	**128**	3210	1566	3140	1420	100	450	3410x150x180	22	25
	3500	1458	**149**	3710	1774	3640	1628	100	450	3910x150x180	25	30
	4000	1667	**171**	4210	2002	4140	1837	100	450	4410x150x180	33	39

Custom sizes are available upon request

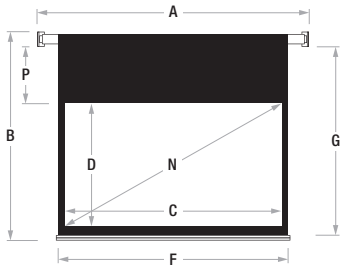

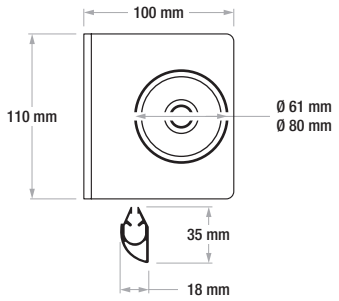

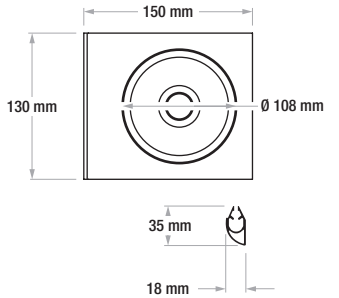

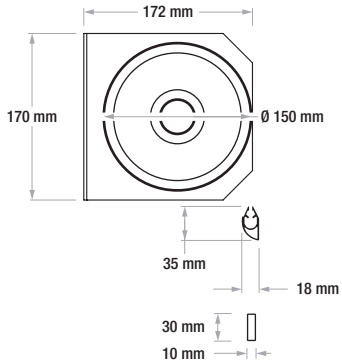

REACH COMPLIANCE CE RoHS COMPLIANT M1 M2 Surface Fireproof Certifications

Basic Without borders

Aspect Ratio	Viewing Width	Viewing Height	Diagonal Inches	Overall Width	Overall Height	Packaging Dimensions	Net Weight	Gross Weight
	C	D	N	A	B	mm	kg	kg
1,00 (1:1)	2000	2000	**111**	2070	2146	2270x150x180	10	11
	2500	2500	**139**	2570	2646	2770x150x180	12	15
	3000	3000	**167**	3070	3146	3270x150x180	22	25
	3500	3500	**195**	3560	3646	3760x150x180	25	30
	4000	4000	**223**	4060	4165	4260x150x180	33	39
	4500	4500	**251**	4560	4665	4760x150x180	38	43
	5000	5000	**278**	5120	5205	5320x150x180	53	75
1,33 (4:3)	2000	1504	**99**	2070	1650	2270x150x180	10	11
	2500	1880	**123**	2570	2026	2770x150x180	12	15
	3000	2256	**148**	3070	2402	3270x150x180	22	25
	3500	2632	**172**	3570	2778	3770x150x180	25	30
	4000	3008	**197**	4060	3173	4260x150x180	33	39
	4500	3383	**222**	4560	3548	4760x150x180	38	43
	5000	3759	**246**	5120	3964	5320x150x180	53	75
	5500	4135	**271**	5620	4340	5820x150x180	59	81
	6000	4511	**296**	6120	4716	6320x150x180	65	87
1,60 (16:10)	2000	1250	**93**	2070	1396	2270x150x180	10	11
	2500	1563	**116**	2570	1709	2770x150x180	12	15
	3000	1875	**139**	3070	2021	3270x150x180	22	25
	3500	2188	**162**	3570	2334	3770x150x180	25	30
	4000	2500	**186**	4060	2665	4260x150x180	33	39
	4500	2813	**209**	4560	2978	4760x150x180	38	43
	5000	3125	**232**	5120	3330	5320x150x180	53	75
	5500	3438	**255**	5620	3643	5820x150x180	59	81
	6000	3750	**279**	6120	3955	6320x150x180	65	87
	6500	4063	**302**	6620	4268	6820x150x180	60	82
1,78 (16:9)	2000	1124	**90**	2070	1270	2270x150x180	10	11
	2500	1404	**113**	2570	1550	2770x150x180	12	15
	3000	1685	**135**	3070	1831	3270x150x180	22	25
	3500	1966	**158**	3570	2112	3770x150x180	25	30
	4000	2247	**181**	4060	2412	4260x150x180	33	39
	4500	2528	**203**	4560	2693	4760x150x180	38	43
	5000	2809	**226**	5120	3014	5320x150x180	53	75
	5500	3090	**248**	5620	3295	5820x150x180	59	81
	6000	3371	**271**	6120	3576	6320x150x180	65	87
	6500	3652	**294**	6620	3857	6820x150x180	60	82
2,35 (21:9)	2000	851	**86**	2070	997	2270x150x180	10	11
	2500	1064	**107**	2570	1210	2770x150x180	12	15
	3000	1277	**128**	3070	1423	3270x150x180	22	25
	3500	1489	**150**	3570	1635	3770x150x180	25	30
	4000	1702	**171**	4060	1867	4260x150x180	33	39
	4500	1915	**193**	4560	2080	4760x150x180	38	43
	5000	2128	**214**	5120	2333	5320x150x180	53	75
	5500	2340	**235**	5620	2545	5820x150x180	59	81
	6000	2553	**257**	6120	2758	6320x150x180	65	87
	6500	2766	**278**	6620	2971	6820x150x180	60	82
2,37	2000	844	**85**	2070	990	2270x150x180	10	11
	2500	1055	**107**	2570	1201	2770x150x180	12	15
	3000	1266	**128**	3070	1412	3270x150x180	22	25
	3500	1477	**150**	3570	1623	3770x150x180	25	30
	4000	1688	**171**	4060	1853	4260x150x180	33	39
	4500	1899	**192**	4560	2064	4760x150x180	38	43
	5000	2110	**214**	5120	2315	5320x150x180	53	75
	5500	2321	**235**	5620	2526	5820x150x180	59	81
	6000	2532	**256**	6120	2737	6320x150x180	65	87
	6500	2743	**278**	6620	2948	6820x150x180	60	82
2,39	2000	837	**85**	2070	983	2270x150x180	10	11
	2500	1046	**107**	2570	1192	2770x150x180	12	15
	3000	1255	**128**	3070	1401	3270x150x180	22	25
	3500	1464	**149**	3570	1610	3770x150x180	25	30
	4000	1674	**171**	4060	1839	4260x150x180	33	39
	4500	1883	**192**	4560	2048	4760x150x180	38	43
	5000	2092	**213**	5120	2297	5320x150x180	53	75
	5500	2301	**235**	5620	2506	5820x150x180	59	81
	6000	2510	**256**	6120	2715	6320x150x180	65	87
	6500	2720	**277**	6620	2925	6820x150x180	60	82
2,40	2000	833	**85**	2070	979	2270x150x180	10	11
	2500	1042	**107**	2570	1188	2770x150x180	12	15
	3000	1250	**128**	3070	1396	3270x150x180	22	25
	3500	1458	**149**	3570	1604	3770x150x180	25	30
	4000	1667	**171**	4060	1832	4260x150x180	33	39
	4500	1875	**192**	4560	2040	4760x150x180	38	43
	5000	2083	**213**	5120	2288	5320x150x180	53	75
	5500	2292	**235**	5620	2497	5820x150x180	59	81
	6000	2500	**256**	6120	2705	6320x150x180	65	87
	6500	2708	**277**	6620	2913	6820x150x180	60	82

Custom sizes are available upon request

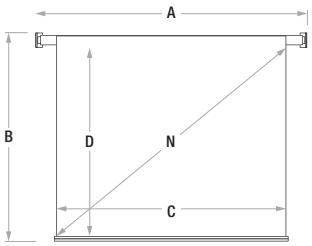

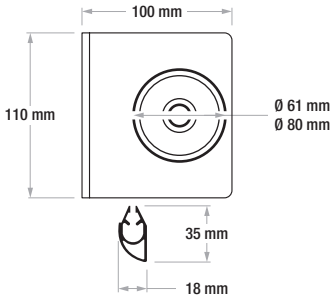

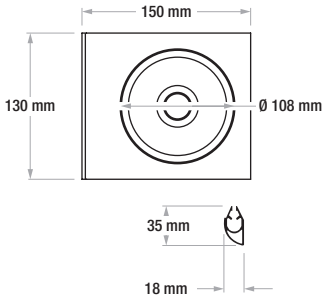

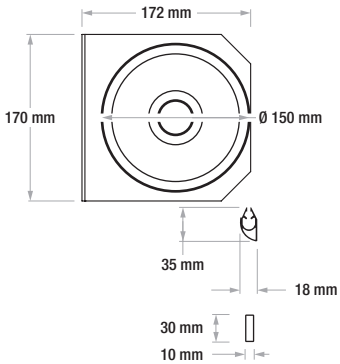

Surface Fireproof Certifications

Linear SE Without borders

Aspect Ratio	Viewing Width	Viewing Height	Diagonal Inches	Overall Width	Overall Height	Packaging Dimensions	Net Weight	Gross Weight
	C	D	N	A	B	mm	kg	kg
1,00 (1:1)	1800	1800	**100**	1860	1943	2060x150x180	12	15
	2000	2000	**111**	2060	2143	2260x150x180	14	17
	2200	2200	**122**	2260	2343	2460x150x180	16	19
	2400	2400	**134**	2460	2543	2660x150x180	18	21
	2600	2600	**145**	2660	2743	2860x150x180	20	23
	3000	3000	**167**	3060	3175	3260X200X210	28	32
1,33 (4:3)	1800	1353	**89**	1860	1496	2060x150x180	12	15
	2000	1504	**99**	2060	1647	2260x150x180	14	17
	2200	1654	**108**	2260	1797	2460x150x180	16	19
	2400	1805	**118**	2460	1948	2660x150x180	18	21
	2600	1955	**128**	2660	2098	2860x150x180	20	23
	3000	2256	**148**	3060	2431	3260x200x210	28	32
	3500	2632	**172**	3560	2807	3760x200x210	33	36
	4000	3008	**197**	4060	3183	4260x200x210	38	42
1,60 (16:10)	1800	1125	**84**	1860	1268	2060x150x180	12	15
	2000	1250	**93**	2060	1393	2260x150x180	14	17
	2200	1375	**102**	2260	1518	2460x150x180	16	19
	2400	1500	**111**	2460	1643	2660x150x180	18	21
	2600	1625	**121**	2660	1768	2860x150x180	20	23
	3000	1875	**139**	3060	2050	3260x200x210	28	32
	3500	2188	**162**	3560	2363	3760x200x210	33	36
	4000	2500	**186**	4060	2675	4260x200x210	38	42
1,78 (16:9)	1800	1011	**81**	1860	1154	2060x150x180	12	15
	2000	1124	**90**	2060	1267	2260x150x180	14	17
	2200	1236	**99**	2260	1379	2460x150x180	16	19
	2400	1348	**108**	2460	1491	2660x150x180	18	21
	2600	1461	**117**	2660	1604	2860x150x180	20	23
	3000	1685	**135**	3060	1860	3260x200x210	28	32
	3500	1966	**158**	3560	2141	3760x200x210	33	36
	4000	2247	**181**	4060	2422	4260x200x210	38	42

Custom sizes are available upon request

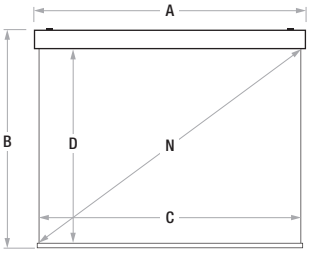

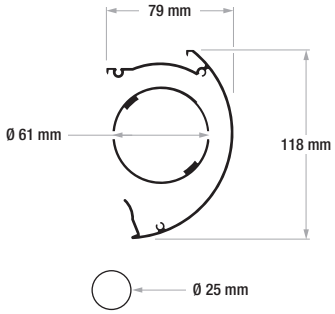

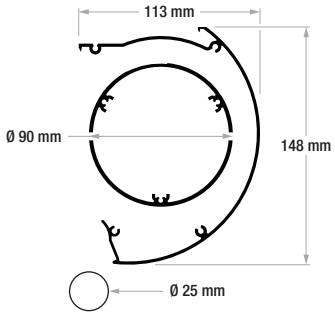

In certain circumstances, due to the surface's height, it is necessary to use a case with the rolling tube of 90 mm.

REACH COMPLIANCE CE RoHS COMPLIANT M1 M2 Surface Fireproof Certifications

Plano

Aspect Ratio	Viewing Width	Viewing Height	Diagonal Inches	Overall Width	Overall Height	Packaging Dimensions	Net Weight	Gross Weight
	C	D	N	A	B	mm	kg	kg
1,33 (4:3)	1800	1353	**89**	1970	1523	2170x150x180	12	15
	2000	1504	**99**	2170	1674	2370x150x180	12,5	16
	2200	1654	**108**	2370	1824	2570x150x180	13,5	16,5
	2500	1880	**123**	2670	2050	2870x150x180	14,5	17,5
	3000	2256	**148**	3170	2426	3370x150x180	14,5	17,5
1,60 (16:10)	1800	1125	**84**	1970	1295	2170x150x180	12	15
	2000	1250	**93**	2170	1420	2370x150x180	12,5	16
	2200	1375	**102**	2370	1545	2570x150x180	13,5	16,5
	2500	1563	**116**	2670	1733	2870x150x180	14,5	17,5
	3000	1875	**139**	3170	2045	3370x150x180	14,5	17,5
1,78 (16:9)	1800	1011	**81**	1970	1181	2170x150x180	12	15
	2000	1124	**90**	2170	1294	2370x150x180	12,5	16
	2200	1236	**99**	2370	1406	2570x150x180	13,5	16,5
	2500	1404	**113**	2670	1574	2870x150x180	14,5	17,5
	3000	1685	**135**	3170	1855	3370x150x180	14,5	17,5
2,35 (21:9)	1800	766	**77**	1970	936	2170x150x180	12	15
	2000	851	**86**	2170	1021	2370x150x180	12,5	16
	2200	936	**94**	2370	1106	2570x150x180	13,5	16,5
	2500	1064	**107**	2670	1234	2870x150x180	14,5	17,5
	3000	1277	**128**	3170	1447	3370x150x180	14,5	17,5

Custom sizes are available upon request

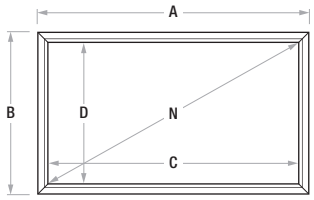

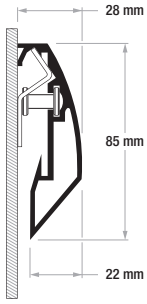

Plano Curved

Aspect Ratio	Viewing Width	Viewing Height	Diagonal Inches	Overall Width	Overall Height	Total Depth	Surface/Wall Distance	Radius of Curvature	Packaging Dimensions	Net Weight	Gross Weight
	C	D	N	A	B	F	J	R	mm	kg	kg
1,33 (4:3)	1800	1353	**89**	1970	1523	110	41	9269	2170x230x180	12	15
	2000	1504	**99**	2170	1674	110	36	10299	2370x230x180	12,5	16
	2200	1654	**108**	2370	1824	110	32	11329	2570x230x180	13,5	16,5
	2500	1880	**123**	2670	2050	110	24	12874	2870x230x180	14,5	17,5
	3000	2256	**148**	3170	2426	110	12	15449	3370x230x180	14,5	17,5
	3500	2632	**172**	3670	2802	150	45	18023	3870x230x180	15,5	18,5
	4000	3008	**197**	4170	3178	150	33	20598	4370x230x180	17	20
1,78 (16:9)	1800	1011	**81**	1970	1181	110	41	9269	2170x230x180	10	13
	2000	1124	**90**	2170	1294	110	36	10299	2370x230x180	10,5	13,5
	2200	1236	**99**	2370	1406	110	32	11329	2570x230x180	11,5	14,5
	2500	1404	**113**	2670	1574	110	24	12874	2870x230x180	12	15
	3000	1685	**135**	3170	1855	110	12	15449	3370x230x180	12,5	15,5
	3500	1966	**158**	3670	2136	150	45	18023	3870x230x180	13	16
	4000	2247	**181**	4170	2417	150	33	20598	4370x230x180	14	17
1,60 (16:10)	1800	1125	**84**	1970	1295	110	41	9269	2170x230x180	12	15
	2000	1250	**93**	2170	1420	110	36	10299	2370x230x180	12,5	16
	2200	1375	**102**	2370	1545	110	32	11329	2570x230x180	13,5	16,5
	2500	1563	**116**	2670	1733	110	24	12874	2870x230x180	14,5	17,5
	3000	1875	**139**	3170	2045	110	12	15449	3370x230x180	14,5	17,5
	3500	2188	**162**	3670	2358	150	45	18023	3870x230x180	15,5	18,5
	4000	2500	**186**	4170	2670	150	33	20598	4370x230x180	16	19
2,35 (21:9)	1800	766	**77**	1970	936	110	41	9269	2170x230x180	10	13
	2000	851	**86**	2170	1021	110	36	10299	2370x230x180	10,5	13,5
	2200	936	**94**	2370	1106	110	32	11329	2570x230x180	11,5	14,5
	2500	1064	**107**	2670	1234	110	24	12874	2870x230x180	12	15
	3000	1277	**128**	3170	1447	110	12	15449	3370x230x180	12,5	15,5
	3500	1489	**150**	3670	1659	150	45	18023	3870x230x180	13	16
	4000	1702	**171**	4170	1872	150	33	20598	4370x230x180	14	17

Custom sizes are available upon request

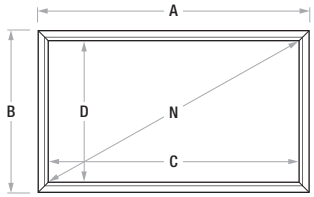

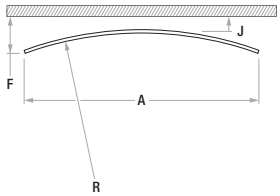

Surface Fireproof Certifications

Prestige

Aspect Ratio	Viewing Width	Viewing Height	Diagonal Inches	Overall Width	Overall Height	Packaging Dimensions	Net Weight	Gross Weight
	C	D	N	A	B	mm	kg	kg
1,33 (4:3)	2000	1504	**99**	2020	1524	2220x150x180	18,1	22,1
	2500	1880	**123**	2520	1900	2720x150x180	23,1	27,1
	3000	2256	**148**	3020	2276	3220x150x180	28,8	32,8
	3500	2632	**172**	3520	2652	3720x150x180	35,3	39,3
	4000	3008	**197**	4020	3028	4220x150x180	42,6	46,6
1,60 (16:10)	2000	1250	**93**	2020	1270	2220x150x180	16,6	20,6
	2500	1563	**116**	2520	1583	2720x150x180	20,9	24,9
	3000	1875	**139**	3020	1895	3220x150x180	25,8	29,8
	3500	2188	**162**	3520	2208	3720x150x180	31,3	35,3
	4000	2500	**186**	4020	2520	4220x150x180	37,5	41,5
1,78 (16:9)	2000	1124	**90**	2020	1144	2220x150x180	15,9	19,9
	2500	1404	**113**	2520	1424	2720x150x180	19,8	23,8
	3000	1685	**135**	3020	1705	3220x150x180	24,3	28,3
	3500	1966	**158**	3520	1986	3720x150x180	29,4	33,4
	4000	2247	**181**	4020	2267	4220x150x180	35,0	39,0
2,35 (21:9)	2000	851	**86**	2020	871	2220x150x180	14,3	18,3
	2500	1064	**107**	2520	1084	2720x150x180	17,5	21,5
	3000	1277	**128**	3020	1297	3220x150x180	21,1	25,1
	3500	1489	**150**	3520	1509	3720x150x180	25,1	29,1
	4000	1702	**171**	4020	1722	4220x150x180	29,6	33,6
2,37	2000	844	**85**	2020	864	2220x150x180	14,3	18,3
	2500	1055	**107**	2520	1075	2720x150x180	17,4	21,4
	3000	1266	**128**	3020	1286	3220x150x180	21,0	25,0
	3500	1477	**150**	3520	1497	3720x150x180	25,0	29,0
	4000	1688	**171**	4020	1708	4220x150x180	29,5	33,5
2,40	2000	833	**85**	2020	853	2220x150x180	14,2	18,2
	2500	1042	**107**	2520	1062	2720x150x180	17,3	21,3
	3000	1250	**128**	3020	1270	3220x150x180	20,9	24,9
	3500	1458	**149**	3520	1478	3720x150x180	24,9	28,9
	4000	1667	**171**	4020	1687	4220x150x180	29,3	33,3

Custom sizes are available upon request

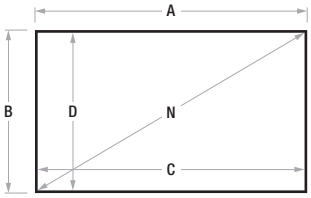

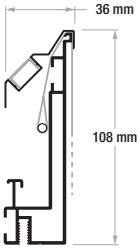

FrameLess

Aspect Ratio	Viewing Width	Viewing Height	Diagonal Inches	Overall Width	Overall Height	Packaging Dimensions	Net Weight	Gross Weight
	A	B	N	A	B	mm	kg	kg
1,00 (1:1)	3000	3000	**167**	3000	3000	3200x210x220	32	36
	3500	3500	**195**	3500	3500	3700x210x220	37	41
	4000	4000	**223**	4000	4000	4200x210x220	43	47
1,33 (4:3)	3000	2256	**148**	3000	2256	3200x210x220	28	32
	3500	2632	**172**	3500	2632	3700x210x220	32	36
	4000	3008	**197**	4000	3008	4200x210x220	37	41
1,60 (16:10)	3000	1875	**139**	3000	1875	3200x210x220	26	30
	3500	2188	**162**	3500	2188	3700x210x220	30	34
	4000	2500	**186**	4000	2500	4200x210x220	34	38
	4500	2813	**209**	4500	2813	3200x510x280	38	42
	5000	3125	**232**	5000	3125	3530x510x280	43	47
	5500	3438	**255**	5500	3438	3870x510x280	48	52
	6000	3750	**279**	6000	3750	4200x510x280	53	57
	6500	4063	**302**	6500	4063	4530x510x280	58	62
1,78 (16:9)	3000	1685	**135**	3000	1685	3200x210x220	25	29
	3500	1966	**158**	3500	1966	3700x210x220	28	32
	4000	2247	**181**	4000	2247	4200x210x220	32	36
	4500	2528	**203**	4500	2528	3200x510x280	36	40
	5000	2809	**226**	5000	2809	3530x510x280	41	45
	5500	3090	**248**	5500	3090	3870x510x280	45	49
	6000	3371	**271**	6000	3371	4200x510x280	50	54
	6500	3652	**294**	6500	3652	4530x510x280	55	59
2,35 (21:9)	3000	1277	**128**	3000	1277	3200x210x220	23	27
	3500	1489	**150**	3500	1489	3700x210x220	26	30
	4000	1702	**171**	4000	1702	4200x210x220	29	33
	4500	1915	**193**	4500	1915	3200x510x280	33	37
	5000	2128	**214**	5000	2128	3530x510x280	36	40
	5500	2340	**235**	5500	2340	3870x510x280	40	44
	6000	2553	**257**	6000	2553	4200x510x280	44	48
	6500	2766	**278**	6500	2766	4530x510x280	48	52
	7000	2979	**300**	7000	2979	4870x510x280	52	56
2,37	3000	1266	**128**	3000	1266	3200x210x220	22	26
	3500	1477	**150**	3500	1477	3700x210x220	26	30
	4000	1688	**171**	4000	1688	4200x210x220	29	33
	4500	1899	**192**	4500	1899	3200x510x280	33	37
	5000	2110	**214**	5000	2110	3530x510x280	36	40
	5500	2321	**235**	5500	2321	3870x510x280	40	44
	6000	2532	**256**	6000	2532	4200x510x280	44	48
	6500	2743	**278**	6500	2743	4530x510x280	48	52
	7000	2954	**299**	7000	2954	7200x210x220	52	56
2,40	3000	1250	**128**	3000	1250	3200x210x220	22	26
	3500	1458	**149**	3500	1458	3700x210x220	26	30
	4000	1667	**171**	4000	1667	4200x210x220	29	33
	4500	1875	**192**	4500	1875	3200x510x280	32	36
	5000	2083	**213**	5000	2083	3530x510x280	36	40
	5500	2292	**235**	5500	2292	3870x510x280	40	44
	6000	2500	**256**	6000	2500	4200x510x280	44	48
	6500	2708	**277**	6500	2708	4530x510x280	48	52
	7000	2917	**299**	7000	2917	4870x510x280	52	56

Custom sizes are available upon request

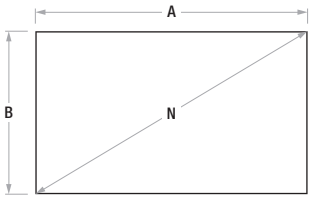

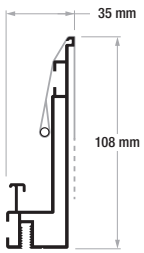

REACH COMPLIANCE CE RoHS COMPLIANT M1 M2 Surface Fireproof Certifications

FrameLess Curved

Aspect Ratio	Viewing Width	Viewing Height	Diagonal Inches	Overall Width	Overall Height	Total Depth	Surface/Wall Distance	Radius of Curvature	Packaging Dimensions	Net Weight	Gross Weight
	A	B	N	A	B	F	J	R	mm	kg	kg
1,78 (16:9)	2000	1124	**90**	2000	1124	134	85	10299	2200x150x180	17	21
	2500	1404	**113**	2500	1404	146	85	12874	2700x150x180	19	23
	3000	1685	**135**	3000	1685	158	85	15449	3200x150x180	21	25
	3500	1966	**158**	3500	1966	170	85	18023	3700x150x180	23	27
	4000	2247	**181**	4000	2247	182	85	20598	4200x150x180	24	28
	4500	2528	**203**	4500	2528	194	85	23173	3200x150x180	26	30
	5000	2809	**226**	5000	2809	207	85	25748	3530x150x180	28	32
	5500	3090	**248**	5500	3090	219	85	28323	3870x150x180	30	34
	6000	3371	**271**	6000	3371	231	85	30897	4200x150x180	31	35
2,35 (21:9)	2000	851	**86**	2000	851	134	85	10299	2200x150x180	17	21
	2500	1064	**107**	2500	1064	146	85	12874	2700x150x180	19	23
	3000	1277	**128**	3000	1277	158	85	15449	3200x150x180	21	25
	3500	1489	**150**	3500	1489	170	85	18023	3700x150x180	23	27
	4000	1702	**171**	4000	1702	182	85	20598	4200x150x180	24	28
	4500	1915	**193**	4500	1915	194	85	23173	3200x150x180	26	30
	5000	2128	**214**	5000	2128	207	85	25748	3530x150x180	28	32
	5500	2340	**235**	5500	2340	219	85	28323	3870x150x180	30	34
	6000	2553	**257**	6000	2553	231	85	30897	4200x150x180	31	35
2,37	2000	844	**85**	2000	844	134	85	10299	2200x150x180	17	21
	2500	1055	**107**	2500	1055	146	85	12874	2700x150x180	19	23
	3000	1266	**128**	3000	1266	158	85	15449	3200x150x180	21	25
	3500	1477	**150**	3500	1477	170	85	18023	3700x150x180	23	27
	4000	1688	**171**	4000	1688	182	85	20598	4200x150x180	24	28
	4500	1899	**192**	4500	1899	194	85	23173	3200x150x180	26	30
	5000	2110	**214**	5000	2110	207	85	25748	3530x150x180	28	32
	5500	2321	**235**	5500	2321	219	85	28323	3870x150x180	30	34
	6000	2532	**256**	6000	2532	231	85	30897	4200x150x180	31	35
2,39	2000	837	**85**	2000	837	134	85	10299	2200x150x180	17	21
	2500	1046	**107**	2500	1046	146	85	12874	2700x150x180	19	23
	3000	1255	**128**	3000	1255	158	85	15449	3200x150x180	21	25
	3500	1464	**149**	3500	1464	170	85	18023	3700x150x180	23	27
	4000	1674	**171**	4000	1674	182	85	20598	4200x150x180	24	28
	4500	1883	**192**	4500	1883	194	85	23173	3200x150x180	26	30
	5000	2092	**213**	5000	2092	207	85	25748	3530x150x180	28	32
	5500	2301	**235**	5500	2301	219	85	28323	3870x150x180	30	34
	6000	2510	**256**	6000	2510	231	85	30897	4200x150x180	31	35
2,40	2000	833	**85**	2000	833	134	85	10299	2200x150x180	17	21
	2500	1042	**107**	2500	1042	146	85	12874	2700x150x180	19	23
	3000	1250	**128**	3000	1250	158	85	15449	3200x150x180	21	25
	3500	1458	**149**	3500	1458	170	85	18023	3700x150x180	23	27
	4000	1667	**171**	4000	1667	182	85	20598	4200x150x180	24	28
	4500	1875	**192**	4500	1875	194	85	23173	3200x150x180	26	30
	5000	2083	**213**	5000	2083	207	85	25748	3530x150x180	28	32
	5500	2292	**235**	5500	2292	219	85	28323	3870x150x180	30	34
	6000	2500	**256**	6000	2500	231	85	30897	4200x150x180	31	35

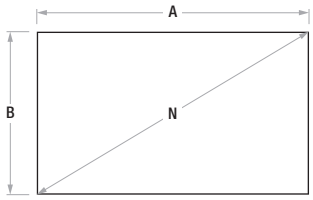

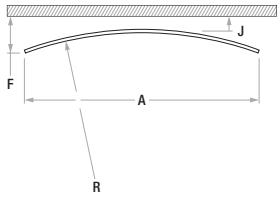

Custom sizes are available upon request

Surface Fireproof Certifications

FramePro FE Front Elastics

Aspect Ratio	Viewing Width	Viewing Height	Diagonal Inches	Overall Width	Overall Height	Packaging Dimensions	Net Weight	Gross Weight
	A	B	N	A	B	mm	kg	kg
1,33 (4:3)	2000	1504	**99**	2000	1504	2200x150x180	13	16
	2500	1880	**123**	2500	1880	2700x150x180	17	20
	3000	2256	**148**	3000	2256	3200x150x180	22	25
	3500	2632	**172**	3500	2632	2832x150x180	27	30
1,78 (16:9)	2000	1124	**90**	2000	1124	2200x150x180	12	15
	2500	1404	**113**	2500	1404	2700x150x180	16	19
	3000	1685	**135**	3000	1685	3200x150x180	21	24
	3500	1966	**158**	3500	1966	2166x150x180	26	29
1,60 (16:10)	2000	1250	**93**	2000	1250	2200x150x180	13	16
	2500	1563	**116**	2500	1563	2700x150x180	17	20
	3000	1875	**139**	3000	1875	3200x150x180	22	25
	3500	2188	**162**	3500	2188	2388x150x180	27	30
2,35 (21:9)	2000	851	**86**	2000	851	2200x150x180	12	15
	2500	1064	**107**	2500	1064	2700x150x180	16	19
	3000	1277	**128**	3000	1277	3200x150x180	21	24
	3500	1489	**150**	3500	1489	1950x150x180	26	29

Custom sizes are available upon request

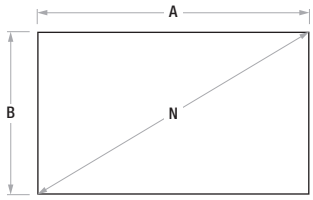

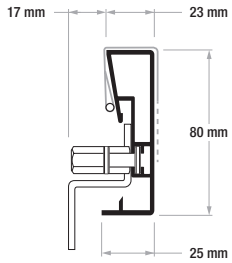

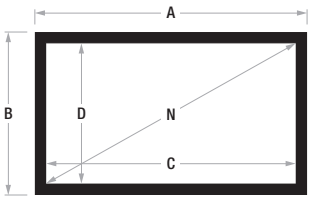

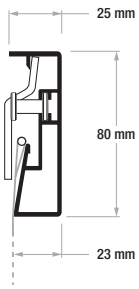

FramePro RE Rear Elastics

Aspect Ratio	Viewing Width	Viewing Height	Diagonal Inches	Overall Width	Overall Height	Packaging Dimensions	Net Weight	Gross Weight
	C	D	N	A	B	mm	kg	kg
4:3	1840	1383	**91**	2000	1543	2200x150x180	13	16
	2340	1759	**115**	2500	1919	2700x150x180	17	20
	2840	2135	**140**	3000	2295	3200x150x180	22	25
	3340	2511	**165**	3500	2671	2871x150x180	27	30
	3840	2887	**189**	4000	3047	3247x150x180	32	35
	4840	3639	**238**	5000	3799	2700x150x180	43	50
	5840	4391	**288**	6000	4551	3200x150x180	53	60
16:9	1840	1034	**83**	2000	1194	2200x150x180	12	15
	2340	1315	**106**	2500	1475	2700x150x180	16	19
	2840	1596	**128**	3000	1756	3200x150x180	21	24
	3340	1876	**151**	3500	2036	2236x150x180	26	29
	3840	2157	**173**	4000	2317	2517x150x180	31	34
	4840	2719	**219**	5000	2879	3079x150x180	41	48
	5840	3281	**264**	6000	3441	3200x150x180	51	58
16:10	1840	1150	**85**	2000	1310	2200x150x180	13	16
	2340	1463	**109**	2500	1623	2700x150x180	17	20
	2840	1775	**132**	3000	1935	3200x150x180	22	25
	3340	2088	**155**	3500	2248	2448x150x180	27	30
	3840	2400	**178**	4000	2560	2760x150x180	32	35
	4840	3025	**225**	5000	3185	3385x150x180	43	50
	5840	3650	**271**	6000	3810	4010x150x180	53	60
21:9	1840	783	**79**	2000	943	2200x150x180	12	15
	2340	996	**100**	2500	1156	2700x150x180	16	19
	2840	1209	**122**	3000	1369	3200x150x180	21	24
	3340	1421	**143**	3500	1581	1950x150x180	26	29
	3840	1634	**164**	4000	1794	2200x150x180	31	34
	4840	2060	**207**	5000	2220	2700x150x180	41	48
	5840	2485	**250**	6000	2645	3200x150x180	51	58

Custom sizes are available upon request

REACH COMPLIANCE CE RoHS COMPLIANT M1 M2 Surface Fireproof Certifications

FramePro FB Front Buttons

Aspect Ratio	Viewing Width	Viewing Height	Diagonal Inches	Overall Width	Overall Height	Packaging Dimensions	Net Weight	Gross Weight
	C	D	N	A	B	mm	kg	kg
1,33 (4:3)	1840	1383	**91**	2000	1543	2200x150x180	13	16
	2340	1759	**115**	2500	1919	2700x150x180	17	20
	2840	2135	**140**	3000	2295	3200x150x180	22	25
	3340	2511	**165**	3500	2671	2871x150x180	27	30
	3840	2887	**189**	4000	3047	3247x150x180	32	35
	4840	3639	**238**	5000	3799	2700x150x180	43	50
	5840	4391	**288**	6000	4551	3200x150x180	53	60
1,78 (16:9)	1840	1034	**83**	2000	1194	2200x150x180	12	15
	2340	1315	**106**	2500	1475	2700x150x180	16	19
	2840	1596	**128**	3000	1756	3200x150x180	21	24
	3340	1876	**151**	3500	2036	2236x150x180	26	29
	3840	2157	**173**	4000	2317	2517x150x180	31	34
	4840	2719	**219**	5000	2879	3079x150x180	41	48
	5840	3281	**264**	6000	3441	3200x150x180	51	58
1,60 (16:10)	1840	1150	**85**	2000	1310	2200x150x180	13	16
	2340	1463	**109**	2500	1623	2700x150x180	17	20
	2840	1775	**132**	3000	1935	3200x150x180	22	25
	3340	2088	**155**	3500	2248	2448x150x180	27	30
	3840	2400	**178**	4000	2560	2760x150x180	32	35
	4840	3025	**225**	5000	3185	3385x150x180	43	50
	5840	3650	**271**	6000	3810	4010x150x180	53	60
2,35 (21:9)	1840	783	**79**	2000	943	2200x150x180	12	15
	2340	996	**100**	2500	1156	2700x150x180	16	19
	2840	1209	**122**	3000	1369	3200x150x180	21	24
	3340	1421	**143**	3500	1581	1950x150x180	26	29
	3840	1634	**164**	4000	1794	2200x150x180	31	34
	4840	2060	**207**	5000	2220	2700x150x180	41	48
	5840	2485	**250**	6000	2645	3200x150x180	51	58

Custom sizes are available upon request

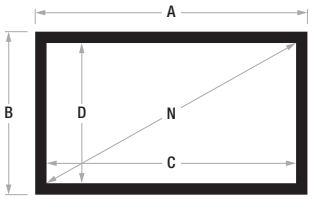

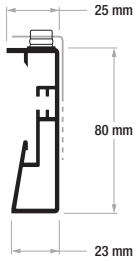

FramePro RB Rear Buttons

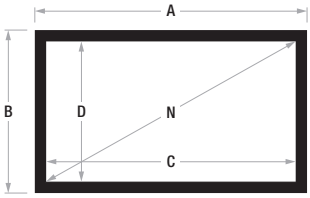

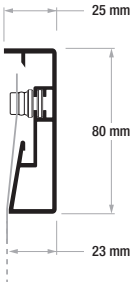

Aspect Ratio	Viewing Width	Viewing Height	Diagonal Inches	Overall Width	Overall Height	Packaging Dimensions	Net Weight	Gross Weight
	C	D	N	A	B	mm	kg	kg
4:3	1840	1383	**91**	2000	1543	2200x150x180	13	16
	2340	1759	**115**	2500	1919	2700x150x180	17	20
	2840	2135	**140**	3000	2295	3200x150x180	22	25
	3340	2511	**165**	3500	2671	2871x150x180	27	30
	3840	2887	**189**	4000	3047	3247x150x180	32	35
	4840	3639	**238**	5000	3799	2700x150x180	43	50
	5840	4391	**288**	6000	4551	3200x150x180	53	60
16:9	1840	1034	**83**	2000	1194	2200x150x180	12	15
	2340	1315	**106**	2500	1475	2700x150x180	16	19
	2840	1596	**128**	3000	1756	3200x150x180	21	24
	3340	1876	**151**	3500	2036	2236x150x180	26	29
	3840	2157	**173**	4000	2317	2517x150x180	31	34
	4840	2719	**219**	5000	2879	3079x150x180	41	48
	5840	3281	**264**	6000	3441	3200x150x180	51	58
16:10	1840	1150	**85**	2000	1310	2200x150x180	13	16
	2340	1463	**109**	2500	1623	2700x150x180	17	20
	2840	1775	**132**	3000	1935	3200x150x180	22	25
	3340	2088	**155**	3500	2248	2448x150x180	27	30
	3840	2400	**178**	4000	2560	2760x150x180	32	35
	4840	3025	**225**	5000	3185	3385x150x180	43	50
	5840	3650	**271**	6000	3810	4010x150x180	53	60
21:9	1840	783	**79**	2000	943	2200x150x180	12	15
	2340	996	**100**	2500	1156	2700x150x180	16	19
	2840	1209	**122**	3000	1369	3200x150x180	21	24
	3340	1421	**143**	3500	1581	1950x150x180	26	29
	3840	1634	**164**	4000	1794	2200x150x180	31	34
	4840	2060	**207**	5000	2220	2700x150x180	41	48
	5840	2485	**250**	6000	2645	3200x150x180	51	58

Custom sizes are available upon request

REACH COMPLIANCE CE RoHS COMPLIANT M2 **Surface Fireproof Certifications**

Cinema

Aspect Ratio	Viewing Width	Viewing Height	Diagonal Inches	Overall Width	Overall Height
	A	B	N	A	B
1,78 (16:9)	7000	3933	**316**	7000	3933
	8000	4494	**361**	8000	4494
	9000	5056	**406**	9000	5056
	10000	5618	**452**	10000	5618
	11000	6180	**497**	11000	6180
	12000	6742	**542**	12000	6742
	13000	7303	**587**	13000	7303
	14000	7865	**632**	14000	7865
	15000	8427	**677**	15000	8427
	16000	8989	**723**	16000	8989
	17000	9551	**768**	17000	9551
1,89	7000	3704	**312**	7000	3704
	8000	4233	**356**	8000	4233
	9000	4762	**401**	9000	4762
	10000	5291	**445**	10000	5291
	11000	5820	**490**	11000	5820
	12000	6349	**534**	12000	6349
	13000	6878	**579**	13000	6878
	14000	7407	**624**	14000	7407
	15000	7937	**668**	15000	7937
	16000	8466	**713**	16000	8466
	17000	8995	**757**	17000	8995
	18000	9524	**802**	18000	9524
2,35 (21:9)	7000	2979	**300**	7000	2979
	8000	3404	**342**	8000	3404
	9000	3830	**385**	9000	3830
	10000	4255	**428**	10000	4255
	11000	4681	**471**	11000	4681
	12000	5106	**513**	12000	5106
	13000	5532	**556**	13000	5532
	14000	5957	**599**	14000	5957
	15000	6383	**642**	15000	6383
	16000	6809	**685**	16000	6809
	17000	7234	**727**	17000	7234
	18000	7660	**770**	18000	7660
	19000	8085	**813**	19000	8085
	20000	8511	**856**	20000	8511
	21000	8936	**899**	21000	8936
	22000	9362	**941**	22000	9362
	23000	9787	**984**	23000	9787
2,37	7000	2954	**299**	7000	2954
	8000	3376	**342**	8000	3376
	9000	3797	**385**	9000	3797
	10000	4219	**427**	10000	4219
	11000	4641	**470**	11000	4641
	12000	5063	**513**	12000	5063
	13000	5485	**556**	13000	5485
	14000	5907	**598**	14000	5907
	15000	6329	**641**	15000	6329
	16000	6751	**684**	16000	6751
	17000	7173	**726**	17000	7173
	18000	7595	**769**	18000	7595
	19000	8017	**812**	19000	8017
	20000	8439	**855**	20000	8439
	21000	8861	**897**	21000	8861
	22000	9283	**940**	22000	9283
	23000	9705	**983**	23000	9705
2,40	7000	2917	**299**	7000	2917
	8000	3333	**341**	8000	3333
	9000	3750	**384**	9000	3750
	10000	4167	**427**	10000	4167
	11000	4583	**469**	11000	4583
	12000	5000	**512**	12000	5000
	13000	5417	**554**	13000	5417
	14000	5833	**597**	14000	5833
	15000	6250	**640**	15000	6250
	16000	6667	**682**	16000	6667
	17000	7083	**725**	17000	7083
	18000	7500	**768**	18000	7500
	19000	7917	**810**	19000	7917
	20000	8333	**853**	20000	8333
	21000	8750	**896**	21000	8750
	22000	9167	**938**	22000	9167
	23000	9583	**981**	23000	9583
	24000	10000	**1024**	24000	10000

Custom sizes are available upon request

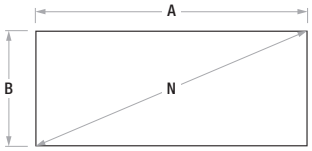

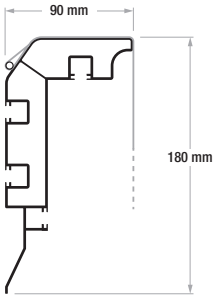

Packaging Dimensions, Net and Gross Weights are available upon request.

Surface Fireproof Certifications

Cinema Curved

Aspect Ratio	Viewing Width	Viewing Height	Diagonal Inches	Overall Width	Overall Height	Total Depth	Surface/Wall Distance	Radius of Curvature
	A	B	N	A	B	F	J	R
1,78 (16:9)	7000	3933	**316**	7000	3933	350	180	36047
	8000	4494	**361**	8000	4494	350	155	41197
	9000	5056	**406**	9000	5056	400	181	46346
	10000	5618	**452**	10000	5618	400	157	51496
	11000	6180	**497**	11000	6180	450	182	56646
	12000	6742	**542**	12000	6742	450	158	61795
	13000	7303	**587**	13000	7303	500	184	66945
	14000	7865	**632**	14000	7865	500	159	72094
	15000	8427	**677**	15000	8427	550	185	77244
	16000	8989	**723**	16000	8989	550	161	82394
	17000	9551	**768**	17000	9551	600	186	87543
1,89	7000	3704	**312**	7000	3704	350	180	36047
	8000	4233	**356**	8000	4233	350	155	41197
	9000	4762	**401**	9000	4762	400	181	46346
	10000	5291	**445**	10000	5291	400	157	51496
	11000	5820	**490**	11000	5820	450	182	56646
	12000	6349	**534**	12000	6349	450	158	61795
	13000	6878	**579**	13000	6878	500	184	66945
	14000	7407	**624**	14000	7407	500	159	72094
	15000	7937	**668**	15000	7937	550	185	77244
	16000	8466	**713**	16000	8466	550	161	82394
	17000	8995	**757**	17000	8995	600	186	87543
	18000	9524	**802**	18000	9524	600	162	92693
2,35 (21:9)	7000	2979	**300**	7000	2979	350	180	36047
	8000	3404	**342**	8000	3404	350	155	41197
	9000	3830	**385**	9000	3830	400	181	46346
	10000	4255	**428**	10000	4255	400	157	51496
	11000	4681	**471**	11000	4681	450	182	56646
	12000	5106	**513**	12000	5106	450	158	61795
	13000	5532	**556**	13000	5532	500	184	66945
	14000	5957	**599**	14000	5957	500	159	72094
	15000	6383	**642**	15000	6383	550	185	77244
	16000	6809	**685**	16000	6809	550	161	82394
	17000	7234	**727**	17000	7234	600	186	87543
	18000	7660	**770**	18000	7660	600	162	92693
	19000	8085	**813**	19000	8085	650	188	97842
	20000	8511	**856**	20000	8511	700	213	102992
	21000	8936	**899**	21000	8936	750	239	108142
	22000	9362	**941**	22000	9362	800	265	113291
	23000	9787	**984**	23000	9787	800	240	118441
2,37	7000	2954	**299**	7000	2954	350	180	36047
	8000	3376	**342**	8000	3376	350	155	41197
	9000	3797	**385**	9000	3797	400	181	46346
	10000	4219	**427**	10000	4219	400	157	51496
	11000	4641	**470**	11000	4641	450	182	56646
	12000	5063	**513**	12000	5063	450	158	61795
	13000	5485	**556**	13000	5485	500	184	66945
	14000	5907	**598**	14000	5907	500	159	72094
	15000	6329	**641**	15000	6329	550	185	77244
	16000	6751	**684**	16000	6751	550	161	82394
	17000	7173	**726**	17000	7173	600	186	87543
	18000	7595	**769**	18000	7595	600	162	92693
	19000	8017	**812**	19000	8017	650	188	97842
	20000	8439	**855**	20000	8439	700	213	102992
	21000	8861	**897**	21000	8861	750	239	108142
	22000	9283	**940**	22000	9283	800	265	113291
	23000	9705	**983**	23000	9705	800	240	118441
2,40	7000	2917	**299**	7000	2917	350	180	36047
	8000	3333	**341**	8000	3333	350	155	41197
	9000	3750	**384**	9000	3750	400	181	46346
	10000	4167	**427**	10000	4167	400	157	51496
	11000	4583	**469**	11000	4583	450	182	56646
	12000	5000	**512**	12000	5000	450	158	61795
	13000	5417	**554**	13000	5417	500	184	66945
	14000	5833	**597**	14000	5833	500	159	72094
	15000	6250	**640**	15000	6250	550	185	77244
	16000	6667	**682**	16000	6667	550	161	82394
	17000	7083	**725**	17000	7083	600	186	87543
	18000	7500	**768**	18000	7500	600	162	92693
	19000	7917	**810**	19000	7917	650	188	97842
	20000	8333	**853**	20000	8333	700	213	102992
	21000	8750	**896**	21000	8750	750	239	108142
	22000	9167	**938**	22000	9167	800	265	113291
	23000	9583	**981**	23000	9583	800	240	118441
	24000	10000	**1024**	24000	10000	850	266	123590

Custom sizes are available upon request

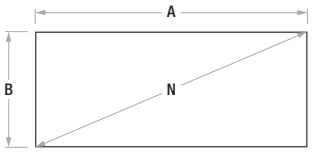

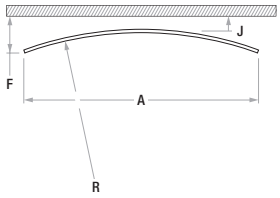

Packaging Dimensions, Net and Gross Weights are available upon request.

Surface Fireproof Certifications

Lift Screen

Cable Lenght	Bar Width	Overall Width	Overall Height	Casing Width	Packaging Dimmensions	Net Weight	Gross Weight
C	D	A	E	B	mm	kg	kg
4000	2500	2580	4244	2480	2780x210x220	23	26,5
4000	3500	3580	4244	3480	3780x210x220	32	35,5
4000	4000	4580	4244	4480	4780x210x220	37	40,5

Custom sizes are available upon request

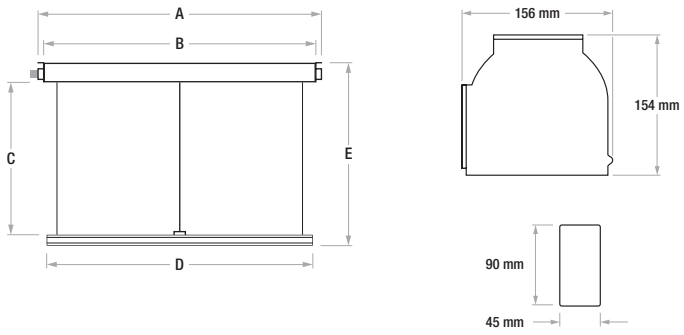

Surface Fireproof Certifications

Easy Surface

Aspect Ratio	Viewing Width	Viewing Height	Diagonal Inches	Overall Width	Overall Height	Net Weight	Gross Weight
	C	D	N	A	B	kg	kg
1,00 (1:1)	2000	2000	**111**	2054	2054	6	10
	2500	2500	**139**	2554	2554	8	12
	3000	3000	**167**	3054	3054	10	14
	3500	3500	**195**	3554	3554	13	17
	4000	4000	**223**	4054	4054	15	19
	4500	4500	**251**	4554	4554	19	23
	5000	5000	**278**	5054	5054	22	26
	5500	5500	**306**	5554	5554	26	30
	6000	6000	**334**	6054	6054	30	34
	6500	6500	**362**	6554	6554	34	38
	7000	7000	**390**	7054	7054	39	43
1,33 (4:3)	2000	1504	**99**	2054	1558	5	9
	2500	1880	**123**	2554	1934	7	11
	3000	2256	**148**	3054	2310	8	12
	3500	2632	**172**	3554	2686	10	14
	4000	3008	**197**	4054	3062	13	17
	4500	3383	**222**	4554	3437	15	19
	5000	3759	**246**	5054	3813	18	22
	5500	4135	**271**	5554	4189	20	24
	6000	4511	**296**	6054	4565	24	28
	6500	4887	**320**	6554	4941	27	31
	7000	5263	**345**	7054	5317	31	35
	7500	5639	**369**	7554	5693	35	39
	8000	6015	**394**	8054	6069	39	43
	8500	6391	**419**	8554	6445	43	47
	9000	6767	**443**	9054	6821	48	52
1,60 (16:10)	2000	1250	**93**	2054	1304	5	9
	2500	1563	**116**	2554	1617	6	10
	3000	1875	**139**	3054	1929	8	12
	3500	2188	**162**	3554	2242	9	13
	4000	2500	**186**	4054	2554	11	15
	4500	2813	**209**	4554	2867	13	17
	5000	3125	**232**	5054	3179	15	19
	5500	3438	**255**	5554	3492	18	22
	6000	3750	**279**	6054	3804	20	24
	6500	4063	**302**	6554	4117	23	27
	7000	4375	**325**	7054	4429	26	30
	7500	4688	**348**	7554	4742	30	34
	8000	5000	**371**	8054	5054	33	37
	8500	5313	**395**	8554	5367	37	41
	9000	5625	**418**	9054	5679	40	44
	9500	5938	**441**	9554	5992	45	49
	10000	6250	**464**	10054	6304	49	53
	11000	6875	**511**	11054	6929	58	62
1,78 (16:9)	2000	1124	**90**	2054	1178	5	9
	2500	1404	**113**	2554	1458	6	10
	3000	1685	**135**	3054	1739	7	11
	3500	1966	**158**	3554	2020	9	13
	4000	2247	**181**	4054	2301	10	14
	4500	2528	**203**	4554	2582	12	16
	5000	2809	**226**	5054	2863	14	18
	5500	3090	**248**	5554	3144	16	20
	6000	3371	**271**	6054	3425	19	23
	6500	3652	**294**	6554	3706	21	25
	7000	3933	**316**	7054	3987	24	28
	7500	4213	**339**	7554	4267	27	31
	8000	4494	**361**	8054	4548	30	34
	8500	4775	**384**	8554	4829	33	37
	9000	5056	**406**	9054	5110	37	41
	9500	5337	**429**	9554	5391	41	45
	10000	5618	**452**	10054	5672	44	48
	11000	6180	**497**	11054	6234	53	57
	12000	6742	**542**	12054	6796	62	66
1,89	2000	1058	**89**	2054	1112	5	9
	2500	1323	**111**	2554	1377	6	10
	3000	1587	**134**	3054	1641	7	11
	3500	1852	**156**	3554	1906	8	12
	4000	2116	**178**	4054	2170	10	14
	4500	2381	**200**	4554	2435	12	16
	5000	2646	**223**	5054	2700	14	18
	5500	2910	**245**	5554	2964	16	20
	6000	3175	**267**	6054	3229	18	22
	6500	3439	**290**	6554	3493	20	24
	7000	3704	**312**	7054	3758	23	27
	7500	3968	**334**	7554	4022	26	30
	8000	4233	**356**	8054	4287	29	33
	8500	4497	**379**	8554	4551	32	36
	9000	4762	**401**	9054	4816	35	39
	9500	5026	**423**	9554	5080	39	43
	10000	5291	**445**	10054	5345	42	46
	11000	5820	**490**	11054	5874	50	54
	12000	6349	**534**	12054	6403	59	63
	13000	6878	**579**	13054	6932	68	72

Custom sizes are available upon request

Aspect Ratio	Viewing Width	Viewing Height	Diagonal Inches	Overall Width	Overall Height	Net Weight	Gross Weight
	C	D	N	A	B	kg	kg
2,35 (21:9)	2000	851	**86**	2054	905	4	8
	2500	1064	**107**	2554	1118	5	9
	3000	1277	**128**	3054	1331	6	10
	3500	1489	**150**	3554	1543	7	11
	4000	1702	**171**	4054	1756	9	13
	4500	1915	**193**	4554	1969	10	14
	5000	2128	**214**	5054	2182	12	16
	5500	2340	**235**	5554	2394	13	17
	6000	2553	**257**	6054	2607	15	19
	6500	2766	**278**	6554	2820	17	21
	7000	2979	**300**	7054	3033	19	23
	7500	3191	**321**	7554	3245	22	26
	8000	3404	**342**	8054	3458	24	28
	8500	3617	**364**	8554	3671	27	31
	9000	3830	**385**	9054	3884	29	33
	9500	4043	**406**	9554	4097	32	36
	10000	4255	**428**	10054	4309	35	39
	11000	4681	**471**	11054	4735	41	45
	12000	5106	**513**	12054	5160	48	52
	13000	5532	**556**	13054	5586	56	60
	14000	5957	**599**	14054	6011	64	68
	15000	6383	**642**	15054	6437	72	76
	16000	6809	**685**	16054	6863	82	86
2,37	2000	844	**85**	2054	898	4	8
	2500	1055	**107**	2554	1109	5	9
	3000	1266	**128**	3054	1320	6	10
	3500	1477	**150**	3554	1531	7	11
	4000	1688	**171**	4054	1742	9	13
	4500	1899	**192**	4554	1953	10	14
	5000	2110	**214**	5054	2164	12	16
	5500	2321	**235**	5554	2375	13	17
	6000	2532	**256**	6054	2586	15	19
	6500	2743	**278**	6554	2797	17	21
	7000	2954	**299**	7054	3008	19	23
	7500	3165	**320**	7554	3219	22	26
	8000	3376	**342**	8054	3430	24	28
	8500	3586	**363**	8554	3640	26	30
	9000	3797	**385**	9054	3851	29	33
	9500	4008	**406**	9554	4062	32	36
	10000	4219	**427**	10054	4273	35	39
	11000	4641	**470**	11054	4695	41	45
	12000	5063	**513**	12054	5117	48	52
	13000	5485	**556**	13054	5539	55	59
	14000	5907	**598**	14054	5961	63	67
	15000	6329	**641**	15054	6383	72	76
	16000	6751	**684**	16054	6805	81	85
2,40	2000	833	**85**	2054	887	4	8
	2500	1042	**107**	2554	1096	5	9
	3000	1250	**128**	3054	1304	6	10
	3500	1458	**149**	3554	1512	7	11
	4000	1667	**171**	4054	1721	9	13
	4500	1875	**192**	4554	1929	10	14
	5000	2083	**213**	5054	2137	12	16
	5500	2292	**235**	5554	2346	13	17
	6000	2500	**256**	6054	2554	15	19
	6500	2708	**277**	6554	2762	17	21
	7000	2917	**299**	7054	2971	19	23
	7500	3125	**320**	7554	3179	21	25
	8000	3333	**341**	8054	3387	24	28
	8500	3542	**363**	8554	3596	26	30
	9000	3750	**384**	9054	3804	29	33
	9500	3958	**405**	9554	4012	32	36
	10000	4167	**427**	10054	4221	35	39
	11000	4583	**469**	11054	4637	41	45
	12000	5000	**512**	12054	5054	47	51
	13000	5417	**554**	13054	5471	55	59
	14000	5833	**597**	14054	5887	63	67
	15000	6250	**640**	15054	6304	71	75
	16000	6667	**682**	16054	6721	80	84

Custom sizes are available upon request

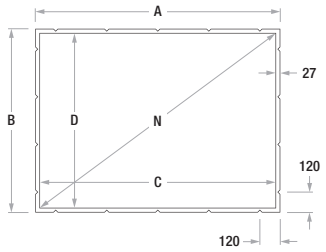

Packaging Dimensions available upon request.

Surface Fireproof Certifications

Eyelet Surface

Aspect Ratio	Viewing Width	Viewing Height	Diagonal Inches	Overall Width	Overall Height	Net Weight	Gross Weight
	C	D	N	A	B	kg	kg
1,00 (1:1)	2000	2000	**111**	2090	2090	6	10
	2500	2500	**139**	2590	2590	8	12
	3000	3000	**167**	3090	3090	10	14
	3500	3500	**195**	3590	3590	13	17
	4000	4000	**223**	4090	4090	16	20
	4500	4500	**251**	4590	4590	19	23
	5000	5000	**278**	5090	5090	22	26
	5500	5500	**306**	5590	5590	26	30
	6000	6000	**334**	6090	6090	30	34
	6500	6500	**362**	6590	6590	35	39
	7000	7000	**390**	7090	7090	40	44
1,33 (4:3)	2000	1504	**99**	2090	1594	5	9
	2500	1880	**123**	2590	1970	7	11
	3000	2256	**148**	3090	2346	9	13
	3500	2632	**172**	3590	2722	11	15
	4000	3008	**197**	4090	3098	13	17
	4500	3383	**222**	4590	3473	15	19
	5000	3759	**246**	5090	3849	18	22
	5500	4135	**271**	5590	4225	21	25
	6000	4511	**296**	6090	4601	24	28
	6500	4887	**320**	6590	4977	27	31
	7000	5263	**345**	7090	5353	31	35
	7500	5639	**369**	7590	5729	35	39
	8000	6015	**394**	8090	6105	39	43
	8500	6391	**419**	8590	6481	43	47
	9000	6767	**443**	9090	6857	48	52
1,60 (16:10)	2000	1250	**93**	2090	1340	5	9
	2500	1563	**116**	2590	1653	6	10
	3000	1875	**139**	3090	1965	8	12
	3500	2188	**162**	3590	2278	9	13
	4000	2500	**186**	4090	2590	11	15
	4500	2813	**209**	4590	2903	13	17
	5000	3125	**232**	5090	3215	15	19
	5500	3438	**255**	5590	3528	18	22
	6000	3750	**279**	6090	3840	21	25
	6500	4063	**302**	6590	4153	23	27
	7000	4375	**325**	7090	4465	27	31
	7500	4688	**348**	7590	4778	30	34
	8000	5000	**371**	8090	5090	33	37
	8500	5313	**395**	8590	5403	37	41
	9000	5625	**418**	9090	5715	41	45
	9500	5938	**441**	9590	6028	44	49
	10000	6250	**464**	10090	6340	49	53
	11000	6875	**511**	11090	6965	58	62
1,78 (16:9)	2000	1124	**90**	2090	1214	5	9
	2500	1404	**113**	2590	1494	6	10
	3000	1685	**135**	3090	1775	7	11
	3500	1966	**158**	3590	2056	9	13
	4000	2247	**181**	4090	2337	10	14
	4500	2528	**203**	4590	2618	12	16
	5000	2809	**226**	5090	2899	14	18
	5500	3090	**248**	5590	3180	17	21
	6000	3371	**271**	6090	3461	19	23
	6500	3652	**294**	6590	3742	22	26
	7000	3933	**316**	7090	4023	24	28
	7500	4213	**339**	7590	4303	27	31
	8000	4494	**361**	8090	4584	30	34
	8500	4775	**384**	8590	4865	34	38
	9000	5056	**406**	9090	5146	37	41
	9500	5337	**429**	9590	5427	41	45
	10000	5618	**452**	10090	5708	45	49
	11000	6180	**497**	11090	6270	53	57
	12000	6742	**542**	12090	6832	62	66
1,89	2000	1058	**89**	2090	1148	5	9
	2500	1323	**111**	2590	1413	6	10
	3000	1587	**134**	3090	1677	7	11
	3500	1852	**156**	3590	1942	8	12
	4000	2116	**178**	4090	2206	10	14
	4500	2381	**200**	4590	2471	12	16
	5000	2646	**223**	5090	2736	14	18
	5500	2910	**245**	5590	3000	16	20
	6000	3175	**267**	6090	3265	18	22
	6500	3439	**290**	6590	3529	21	25
	7000	3704	**312**	7090	3794	23	27
	7500	3968	**334**	7590	4058	26	30
	8000	4233	**356**	8090	4323	29	33
	8500	4497	**379**	8590	4587	32	36
	9000	4762	**401**	9090	4852	35	39
	9500	5026	**423**	9590	5116	39	43
	10000	5291	**445**	10090	5381	43	47
	11000	5820	**490**	11090	5910	50	54
	12000	6349	**534**	12090	6439	59	63
	13000	6878	**579**	13090	6968	68	72

Custom sizes are available upon request

Aspect Ratio	Viewing Width	Viewing Height	Diagonal Inches	Overall Width	Overall Height	Net Weight	Gross Weight
	C	D	N	A	B	kg	kg
2,35 (21:9)	2000	851	**86**	2090	941	4	8
	2500	1064	**107**	2590	1154	5	9
	3000	1277	**128**	3090	1367	6	10
	3500	1489	**150**	3590	1579	7	11
	4000	1702	**171**	4090	1792	9	13
	4500	1915	**193**	4590	2005	10	14
	5000	2128	**214**	5090	2218	12	16
	5500	2340	**235**	5590	2430	14	18
	6000	2553	**257**	6090	2643	15	19
	6500	2766	**278**	6590	2856	17	21
	7000	2979	**300**	7090	3069	20	24
	7500	3191	**321**	7590	3281	22	26
	8000	3404	**342**	8090	3494	24	28
	8500	3617	**364**	8590	3707	27	31
	9000	3830	**385**	9090	3920	30	34
	9500	4043	**406**	9590	4133	33	37
	10000	4255	**428**	10090	4345	35	39
	11000	4681	**471**	11090	4771	42	46
	12000	5106	**513**	12090	5196	49	53
	13000	5532	**556**	13090	5622	56	60
	14000	5957	**599**	14090	6047	64	68
	15000	6383	**642**	15090	6473	73	77
	16000	6809	**685**	16090	6899	82	86
2,37	2000	844	**85**	2090	934	4	8
	2500	1055	**107**	2590	1145	5	9
	3000	1266	**128**	3090	1356	6	10
	3500	1477	**150**	3590	1567	7	11
	4000	1688	**171**	4090	1778	9	13
	4500	1899	**192**	4590	1989	10	14
	5000	2110	**214**	5090	2200	12	16
	5500	2321	**235**	5590	2411	14	18
	6000	2532	**256**	6090	2622	15	19
	6500	2743	**278**	6590	2833	17	21
	7000	2954	**299**	7090	3044	20	24
	7500	3165	**320**	7590	3255	22	26
	8000	3376	**342**	8090	3466	24	28
	8500	3586	**363**	8590	3676	27	31
	9000	3797	**385**	9090	3887	29	33
	9500	4008	**406**	9590	4098	31	35
	10000	4219	**427**	10090	4309	35	39
	11000	4641	**470**	11090	4731	42	46
	12000	5063	**513**	12090	5153	48	52
	13000	5485	**556**	13090	5575	56	60
	14000	5907	**598**	14090	5997	64	68
	15000	6329	**641**	15090	6419	72	76
	16000	6751	**684**	16090	6841	81	85
2,40	2000	833	**85**	2090	923	4	8
	2500	1042	**107**	2590	1132	5	9
	3000	1250	**128**	3090	1340	6	10
	3500	1458	**149**	3590	1548	7	11
	4000	1667	**171**	4090	1757	9	13
	4500	1875	**192**	4590	1965	10	14
	5000	2083	**213**	5090	2173	12	16
	5500	2292	**235**	5590	2382	13	17
	6000	2500	**256**	6090	2590	15	19
	6500	2708	**277**	6590	2798	17	21
	7000	2917	**299**	7090	3007	19	23
	7500	3125	**320**	7590	3215	22	26
	8000	3333	**341**	8090	3423	24	28
	8500	3542	**363**	8590	3632	26	30
	9000	3750	**384**	9090	3840	29	33
	9500	3958	**405**	9590	4048	31	35
	10000	4167	**427**	10090	4257	35	39
	11000	4583	**469**	11090	4673	41	45
	12000	5000	**512**	12090	5090	48	52
	13000	5417	**554**	13090	5507	55	59
	14000	5833	**597**	14090	5923	63	67
	15000	6250	**640**	15090	6340	72	76
	16000	6667	**682**	16090	6757	81	85

Custom sizes are available upon request

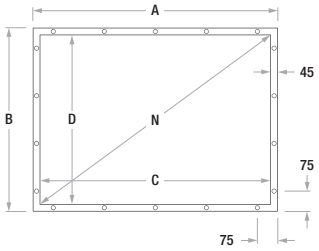

Packaging Dimensions available upon request.

Surface Fireproof Certifications

INSTALLATION SYSTEMS AND ACCESSORIES

Standard and quick installation systems

The screens of the Elegance and Professional lines, also in the Tensio CTS and Tensio Classic versions, are mounted with two different types of installation, which allow different configurations to suit the various types of applications.

The standard assembly system focuses on aesthetics, and hides the support structure from sight. First of all the standard support device is secured to the bracket with a screw and hooked onto the profile. Then the plastic wrench is used to fasten the bracket in the optimal position: the assembly is finally tightened with a nut (see picture on the right).

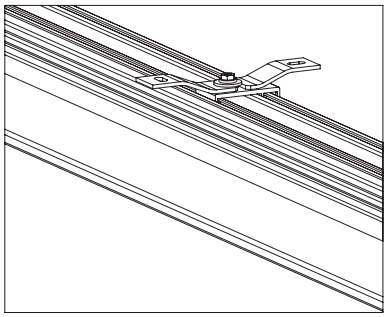

Standard ceiling installation

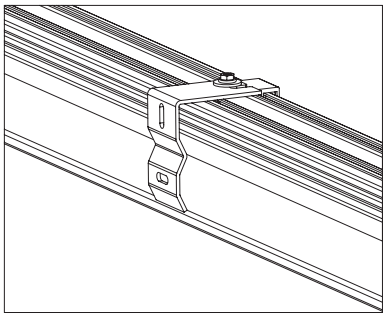

Standard wall installation

The optional quick assembly system is simpler and faster, and ideal for the professional installations. Just anchor the 4 cm and 20 cm hooks of the case into the single (wall- or ceiling-mount) bracket and finally block the screw. To facilitate these operations it is advisable to partially tighten the nut before proceeding with the alignment.

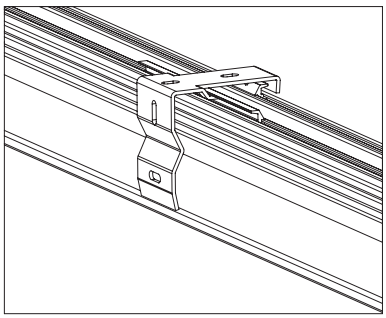

Quick installation

Installation of 103 (and 119) mm case screens

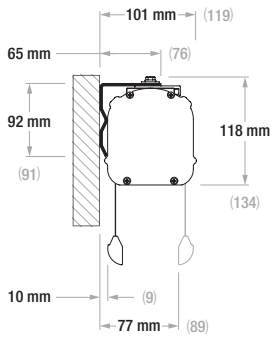

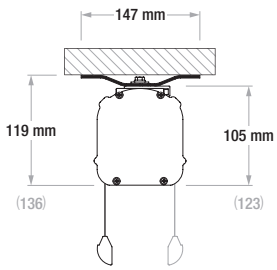

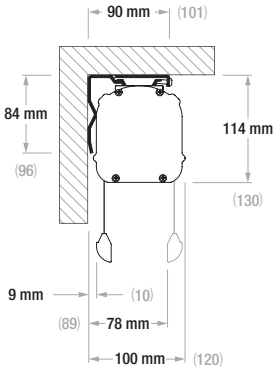

Installation of OnSuperior screens with 90 (and 120) mm rolling tube

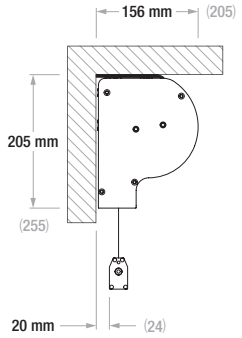

Installation of Linear SE screens with 61 (and 90) mm rolling tube

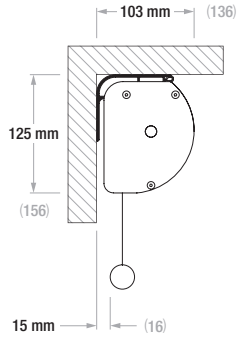

Installation of Rugby PLUS and PRO screens with 61 (and 90) mm rolling tube

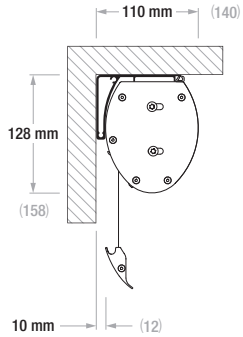

Installation of Rugby PLUS and PRO screens with 61 (and 90) mm rolling tube with front fall

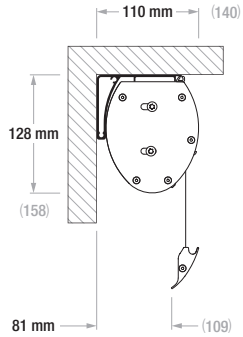

Installation of Multiformat screens

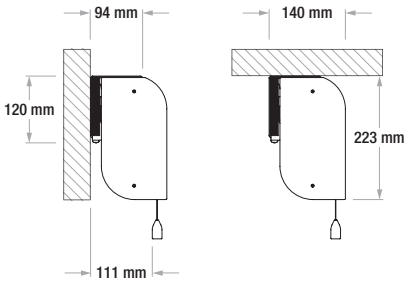

Installation of Biformat screens

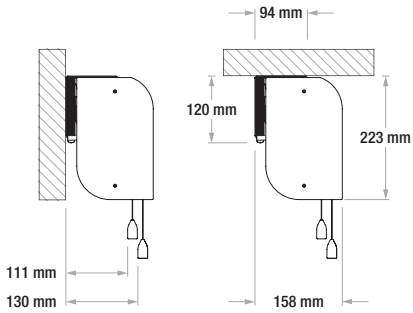

Installation of large-scale screens

The Alumid screen, whether wall- or ceiling-mounted, is installed exclusively with the quick method, with front or rear surface drop. The structure of the case enables immediate anchoring to the bracket.

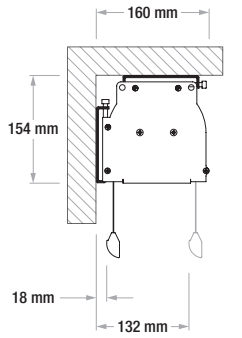

Same type of case and same installation method also for big brother Max One: quick wall- or ceiling-mount, with front or rear drop of the canvas. The version without case is supplied with two side brackets for wall and ceiling mounting and use a pivot with a range of 70 mm to make the installation easier.

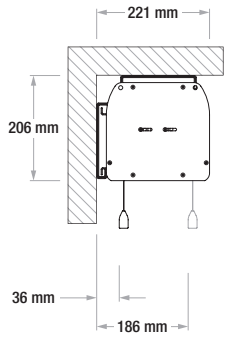

Accessories

The range of Adeo screens is complemented by a series of accessories for use during installation or for personalizing the control of the operative phases.

Screen's remote control interface
(RF, RS232 and Trigger)

The Adeo control interface has been designed to control the screens' various motorisations via different command modalities.
The hardware card features two types of connection: the first enables the connection of a two-phase motor to a common-forward-reverse-ground cabling; the second connects Adeo screens equipped with radio integrated motors. The interface can be used in the following modalities:

> Radio Frequency (RF)
> 12V Trigger
> Low voltage dry contacts via relay or RS232

Remote controls used with interfaces

Remote controls to manage 1 or more screens.

***Way* portable supports**

Supports for inserting *Way* remote control. Adeo offers an extensive range of models for every kind of furnishing: shockproof supports for tabletop and wall-mount (white), oval shockproof supports for tabletop (available in white or transparent) and square or rectangular wall-mount holder (available in aluminium, white, graphite, black, transparent, and aqua green).

Infrared receiver and remote control
(for motorized screen)

Compatible with screen models with standard mechanical motor.
The kit is composed of a receiver control unit,external IR receiver with connection cable (1 m) and transmitter.

External RF unit

Compatible with any mechanical motor

The kit is composed of a RF receiver control unit and a 12V Wireless Trigger.

The kit is composed of a RF receiver control unit and a Syncro Power Relay.

Extension brackets for rolling screens

Extension brackets available in glossy powder-varnished white (RAL 9010) for standard brackets supplied for anchoring all types of screens, to be applied in the presence of obstacles on the wall or ceiling. Available in the following sizes: 360 mm (up to 180 kg), 450 mm (up to 120 kg), 520 mm (up to 70 kg), 600 mm (up to 90 kg) and 750 mm (up to 70 kg). Weights and sizes refer to a single bracket. The use of more extension brackets allows a higher load-bearing capacity: for example, three 360 mm extensions can bear a weight of 540 kg.

Adjustable legs for FramePro and Plano screens

Pair of professional floor legs for fixed screen models FramePro and Plano. The legs are height-adjustable from a minimum 80 cm to a maximum 284 cm.
Suitable only for fixed screens with maximum height of 204 cm.

Adeo Screen Sp. z o.o. reserves the right to modify its products and technical data at any time without prior notice.
All technical data in this catalogue is updated based on the Adeo Screen Price List Version June 2025.

Dimensional tolerance

All projection surfaces used for manufacturing video projection screens are made of PVC or plasticized fiberglass.
Such surfaces are sensitive to temperature and humidity, and therefore the accepted dimensional tolerance is of 1% on every dimensions.

Dimensional tolerance on alluminium profiles are of +/-2 mm.

Dimensional tolerances on overall widths are
+/- 3 mm till 2500 mm overall width
+/- 5 mm till 4000 mm overall width
+/- 10 mm till 8000 mm overall width
+/- 20 mm till 16000 mm overall width
+/- 30 mm till 24000 mm overall width